# GENESYS® 4X3-9

## INSTALLATION AND SERVICE MANUAL

FILL IN FOR FUTURE REFERENCE:

**MODEL:** _____

**SERIAL NUMBER:** _____

**DATE PURCHASED:** _____

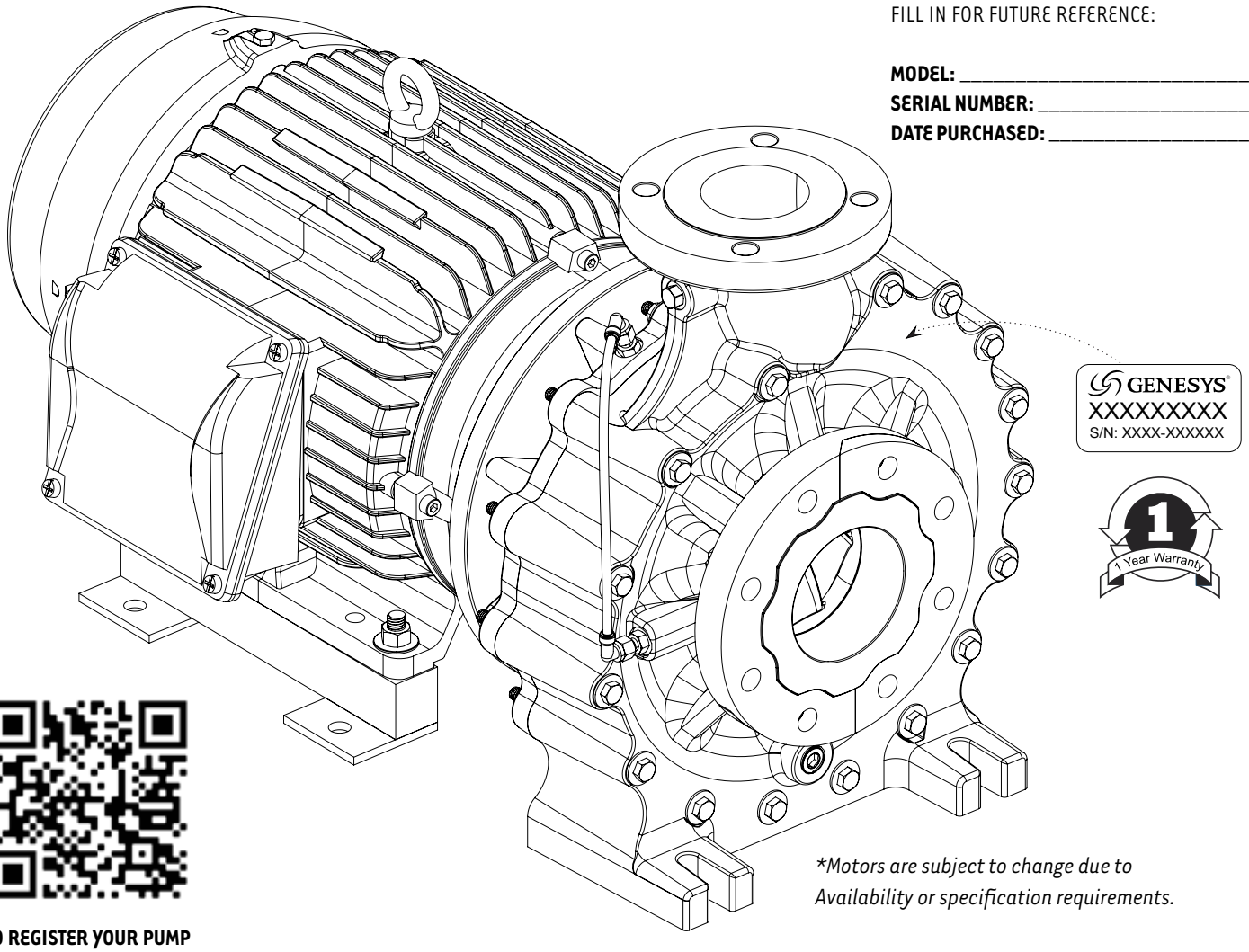


**Motors are subject to change due to Availability or specification requirements.*

**TO REGISTER YOUR PUMP SCAN THIS QR CODE OR VISIT MDMINC.COM/PUMP-REGISTRATION**

**TYPE:** END-SUCTION CENTRIFUGAL
**MOTOR:** NEMA 254/6JM-324/6JM
**HORSEPOWER:** 7.5HP TO 60HP
**INLET:** 4" FLANGED
**DISCHARGE:** 3" FLANGED
**MATERIAL:** VINYL ESTER AND POLYESTER THERMOSET GLASS FILLED THERMOPLASTIC

**HARDWARE:** 316 STAINLESS STEEL
**SEAL OPTIONS:** IMPENATRA® III NON-METALLIC MECHANICAL SEAL
316SS REVERSE MOUNT MECHANICAL SEAL
**ACCESSORIES:** FIBERGLASS REDUCING OFFSET INLET STRAINER BASKET
VARIABLE FREQUENCY DRIVE

**Read completely before you install or operate your new pump. Do not allow the motor to become submerged. Never run dry. Never exceed an internal case pressure of: 100 PSI.**


© MDM INCORPORATED

We congratulate you on your choice of the Genesys® 4x3-9 Centrifugal Pump. It has been carefully designed using the advantages of the latest technology and carefully constructed to give you unprecedented dependability. To ensure proper performance, we urge you to carefully follow the instructions in this manual. If you have any questions, please call your supplier for assistance or visit us at www.mdminc.com/support.

## INSTALLATION GUIDELINES

**PLEASE READ CAREFULLY. WHEN PROPERLY INSTALLED, THIS GENESYS® PUMP WILL PROVIDE DEPENDABLE TROUBLE-FREE SERVICE.**

1. Locate the pump as near the fluid source as possible. A flooded suction situation is preferred.
2. Mount the motor foot, shim system, and pump end to a secure, immobile foundation. Please reference "GENESYS® 4X3-9 ANCHOR INSTALLATION" on the page 3 for anchor details.
3. The pipe fittings should be self-supported and in neutral alignment with each port (i.e. Fittings must not be forced into alignment which may cause premature piping failure or damage to the pump volute). Use of expansion joint couplings is recommended.
4. Never restrict the intake. Keep both input and discharge lines as free of elbows and valves as possible. Always use pipe of adequate diameter. This will reduce friction losses and maximize output.

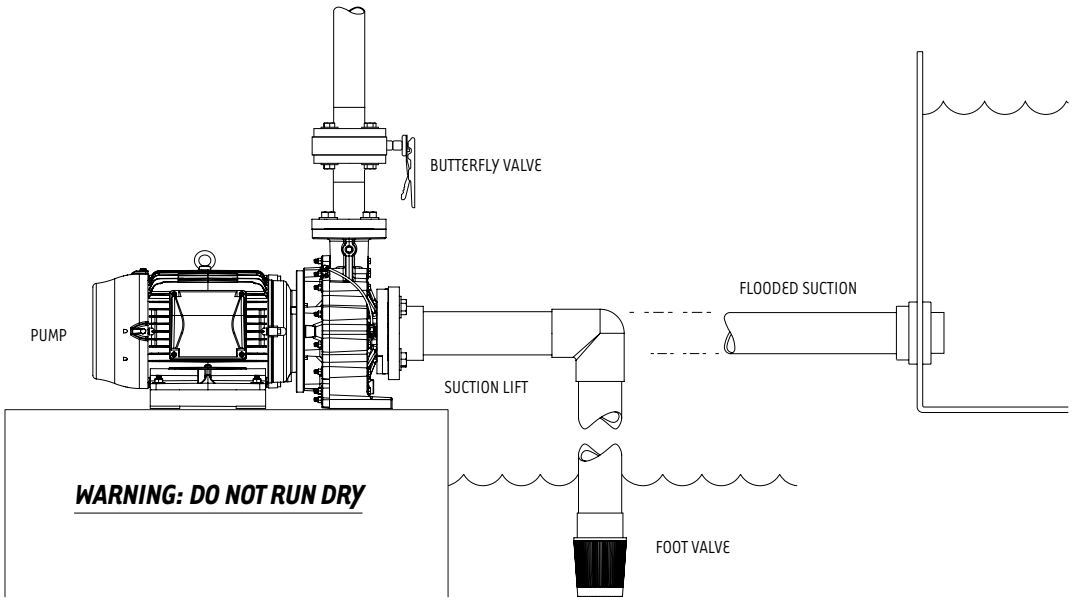


**WARNING: ALWAYS SHUT OFF ELECTRICAL POWER BEFORE INSTALLATION AND / OR SERVICING THIS PUMP.**
ALL ELECTRICAL WIRING SHOULD MEET STATE AND LOCAL ORDINANCES. IMPROPER WIRING MAY NOT ONLY BE A SAFETY HAZARD BUT MAY PERMANENTLY DAMAGE THE PUMP AND MOTOR.

## ELECTRICAL CONNECTIONS

1. Electrical connections should be made by qualified personnel.
2. Check that the supply voltage matches the motor's nameplate voltage.
3. Verify motor rotation with a phase rotation tester. Do not run pump dry.


© MDM INCORPORATED

## GENESYS® 4X3-9 ANCHOR INSTALLATION

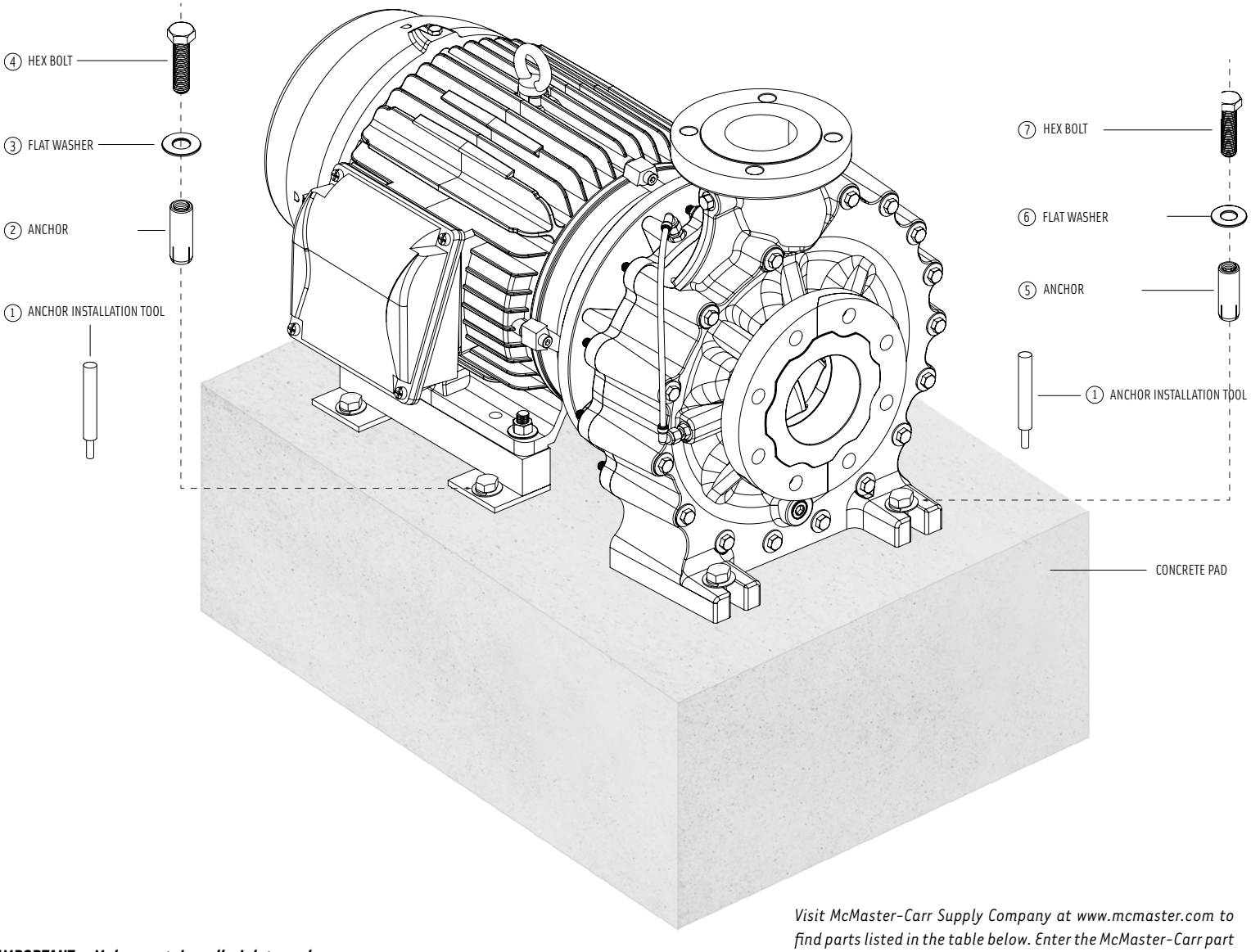


***IMPORTANT: Make certain all inlet and discharge piping are independently supported to a post base, strut, and pipe clamp system.***

*Visit McMaster-Carr Supply Company at www.mcmaster.com to find parts listed in the table below. Enter the McMaster-Carr part number in their search engine to be directed to part page.*

**Consult Motor Name Plate for Frame Size Specification**

| NO. | DESCRIPTION | QTY. | NEMA 254JM-326JM |
|---|---|---|---|
| | **MOTOR MOUNTING HARDWARE** | | **MCMASTER-CARR PART NUMBERS** |
| 1 | ANCHOR INSTALLATION TOOL | 1 | 97095A180 |
| 2 | ANCHOR | 4 | 97077A180 |
| 3 | FLAT WASHER | 4 | 90107A033 |
| 4 | HEX BOLT | 4 | 93190A712 |
| | | | |
| | **PUMP MOUNTING HARDWARE** | | **MCMASTER-CARR PART NUMBERS** |
| 5 | ANCHOR | 2 | 97095A180 |
| 6 | FLAT WASHER | 2 | 90107A033 |
| 7 | HEX BOLT | 2 | 92186A720 |


© MDM INCORPORATED

## GENESYS® 4X3-9 PUMP SCHEMATIC

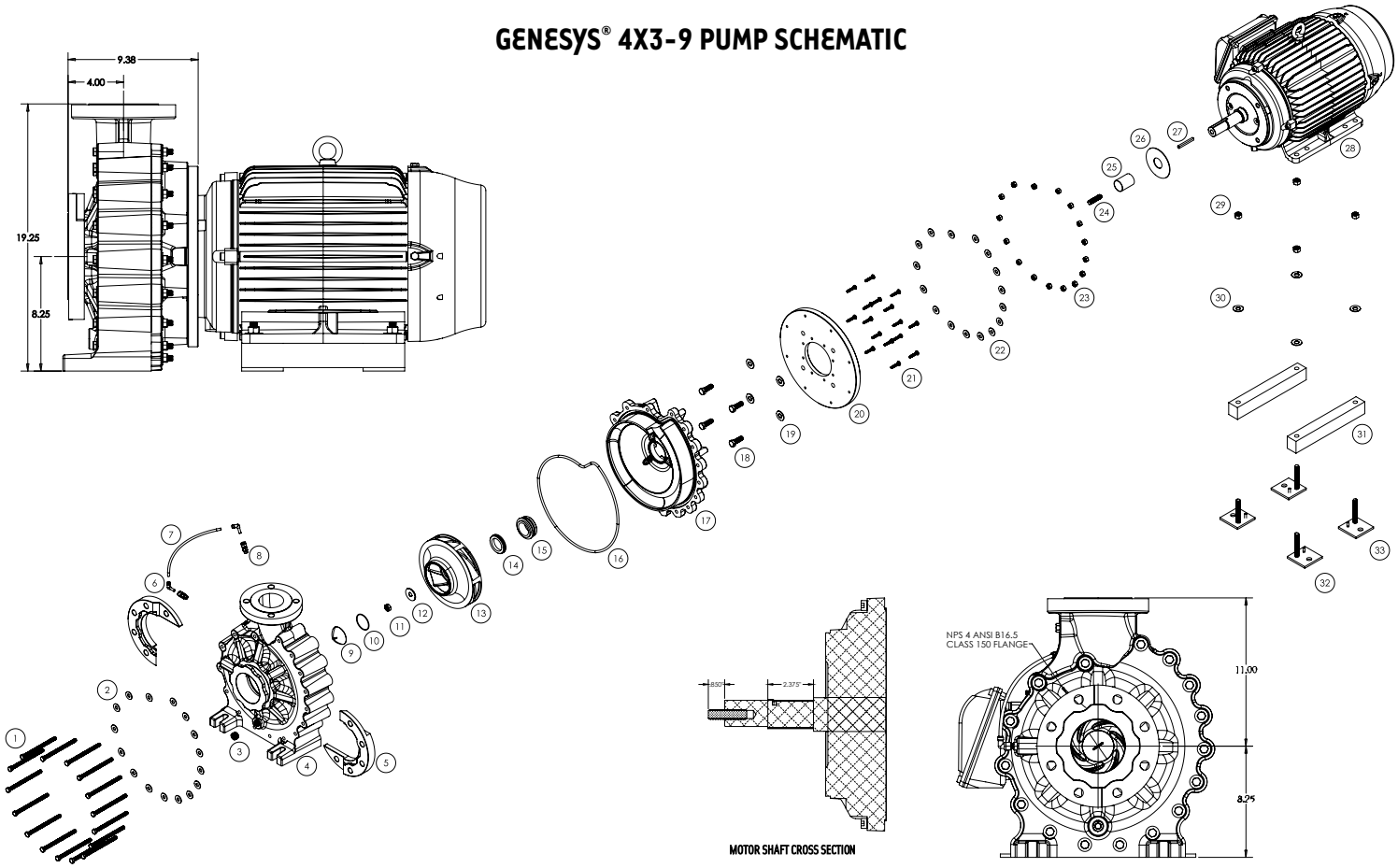


| REFERENCE NUMBER | PART NAME | QTY. |
|---|---|---|
| 1 | BOLT, CASE FRONT | 16 |
| 2 | WASHER, CASE FRONT | 16 |
| 3 | DRAIN PLUG | 1 |
| 4 | VOLUTE | 1 |
| 5 | HALF FLANGE | 2 |
| 6 | ELBOW | 2 |
| 7 | 1/4" TUBE | 1 |
| 8 | FITTING | 2 |
| 9 | NOSE CAP | 1 |
| 10 | O-RING, NOSE CAP | 1 |
| 11 | NUT, IMPELLER | 1 |
| 12 | WASHER, IMPELLER | 1 |
| 13 | IMPELLER | 1 |
| 14 | SEAL SEAT | 1 |
| 15 | SEAL CASE | 1 |
| 16 | O-RING, CASE | 1 |
| 17 | BRACKET | 1 |
| 18 | BOLT, MOTOR | 4 |
| 19 | WASHER, MOTOR | 4 |
| 20 | MOTOR ADAPTER PLATE | 1 |
| 21 | SCREW, MOTOR ADAPTER PLATE | 16 |
| 22 | WASHERS, CASE REAR | 16 |
| 23 | NUT, CASE REAR | 16 |
| 24 | STUD, IMPELLER | 1 |
| 25 | HEAT SHRINK | 1 |
| 26 | SLINGER | 1 |
| 27 | KEY, MOTOR SHAFT | 1 |
| 28 | MOTOR | 1 |
| 29 | NUT, MOTOR | 4 |
| 30 | WASHER, MOTOR MOUNT | 4 |
| 31 | RISER BLOCK | 2 |
| 32 | THREADED ROD ASSEMBLY, LEFT | 2 |
| 33 | THREADED ROD ASSEMBLY, RIGHT | 2 |

| QTY. | TOOLS / MATERIALS | USAGE |
|---|---|---|
| 1 | ROLL OF PAPER TOWELS | WIPE OFF EXCESS GREASE / HANDS |
| 1 | TUBE OF MOLYKOTE® 111 / SILICONE GREASE | LUBRICATE / SEALS PARTS |
| 1 | BOTTLE/ STICK LOCTITE | HELPS BOLTS REMAIN TIGHT |
| 1 | HEAT GUN | SHRINK TUBING SLEEVE |
| 1 | BOX OF LINT FREE TISSUE | WIPE OFF SEAL FACES |
| 1 | BOTTLE OF RUBBING ALCOHOL | CLEAN SEAL FACES / SURFACES |
| 1 | TUBE OF ANTI-SEIZE GREASE / LUBRICANT | 1. APPLY TO SHAFT END<br>2. APPLY TO ALL BOLT THREADS |
| 1 | BOX KNIFE | CUT HEAT SHRINKING TUBE |
| 1 | ARBOR PRESS | 1. PRESS SEAL HEAD INTO BRACKET<br>2. PRESS SEAT INTO IMPELLER |
| 1 | **HAMMER / MALLET | **IF ARBOR PRESS IS NOT AVAILABLE |
| 1 | CALIPERS | 1. MEASURE THREADED ROD<br>2. MEASURE HEAT SHRINK TUBING SLEEVE |
| 1 | PLIERS / CHANNEL LOCKS | HOLD SHAFT STILL |
| 1 | CHAMFERING TOOL | 1. CHAMFER IMPELLER BORE EDGE<br>2. CHAMFER BRACKET BORE EDGE |
| 1 | SEAL HEAD PRESS TOOL (INCLUDED WITH PUMP) | PRESS SEAL HEAD INTO BRACKET (SEE SEAL REPL. GUIDE) |
| 1 | 1/4" ALLEN WRENCH | INSTALL THREADED ROD INTO MOTOR SHAFT |
| 1 | 3/8" ALLEN WRENCH | INSTALL DRAIN PLUG |
| 1 | 3/4" WRENCH | INSTALL BRACKET BOLTS |
| 1 | TORQUE WRENCH | TO INSTALL IMPELLER NUT (CANNOT EXCEED 40 IN. LBS.) |
| 1 | 3/4" DEEP SOCKET | TIGHTEN IMPELLER NUT @ 40 IN. LBS. |
| 1 | 5/8" DEEP SOCKET | TIGHTEN IMPELLER CAP |
| 2 | 1/2" WRENCH | TIGHTEN VOLUTE BOLTS |
| 2 | 15/16" WRENCH | TIGHTEN FLANGE NUTS / BOLTS |


© MDM INCORPORATED

## 4X3-9 PUMP END ASSEMBLY

### MOTOR

1. De-grease motor shaft and C-face.
2. Electrically run motor to check integrity if desired.
3. Assemble the pump onto the motor in a vertical position.
4. Use Loctite Orange on the ½"-13 x 2" threaded stud when threading into the motor shaft end, this will secure the threaded stud in place during impeller installation. See motor shaft cross-section on P.4.
5. Thread the stud into the motor shaft end leaving .850" past the end of the motor shaft.
6. Apply heat shrink tubing to the exposed portion of the motor shaft. Reference motor shaft drawing: "Motor Shaft Cross Section" on PG 4.
7. Apply anti-seize to the motor C-face and remaining exposed motor shaft.
8. Install slinger.

### BRACKET

1. De-burr/chamfer edges around the seal bore.
2. Apply light coating of Molykote® 111 grease to the seal bore leading edge and seal casing bore o-ring.
3. Install seal head, wipe away any excess grease squeeze out, clean seal face with alcohol.
4. Attach bracket with motor adaptor plate to the motor.

### IMPELLER

1. Ensure that the seal bore is chamfered, lightly grease impeller and seal seat o-ring, install seal seat ensuring the seat is bottomed and sitting level.
2. Wipe away any excess grease, clean seal face with alcohol.
3. Align keyway on the motor shaft key, slide impeller down to make contact with the seal head. There should be some spring movement before the impeller bottoms on the motor shaft shoulder.
4. Install impeller washer and impeller nut, use thread locker where the impeller nut locates. Tighten to 30 ft. lbs.

### IMPELLER NOSE CAP

1. Test fit the impeller nose cap onto the motor shaft threaded stud, make sure the impeller nose cap makes firm contact with the flat on the impeller. A small mirror is helpful on this step.
2. If impeller nose cap makes firm contact with the impeller flat, remove the impeller nose cap, apply grease to the o-ring gland, install o-ring. Apply a light film of grease to the impeller flat, install the impeller nose cap and tighten with a wide, flat bladed screwdriver. Wipe away any excess grease.

### VOLUTE

1. Install the large o-ring into the bracket gland, place volute on top of the bracket.
2. Using 3/8"-16 x 5-1/2" bolts (16), washers (32) and nuts (16), secure the volute and bracket together. Use anti-seize on the bolt threads. Tighten until volute and bracket ears make contact.
3. Install the two inlet flange halves.
4. Install the two seal flush fittings and stem elbows in appropriate ports, install tubing between the fittings and cautiously tighten till grip is felt on the elbow stem. Plug the remaining port.

### TEST PUMP

- Confirm all plumbing / piping to pump-flange connections are torqued down according to Figure 1.
- Recommended Bolt Torque is shown in Figure 1. Threads should be clean and well lubricated. Actual field conditions may require variations in these recommendations.

  **Caution: Unnecessary over-torquing will damage the flange.**
- Flood water, some tightening of the seal flush fittings may be necessary.
- If a VFD is utilized, make certain to use the jog function when testing rotation.

**Figure 1**

| FLANGE SIZE (IN.) | RECOMMENDED TORQUE (FT. LBS.) |
|---|---|
| 2-4 | 25 |
| 6 | 40 |

Torque Sequence

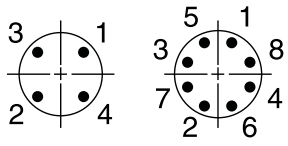


## DISASSEMBLY

Disassembly is the reverse of assembly.


© MDM INCORPORATED

## B73LEAN BACK END PULLOUT

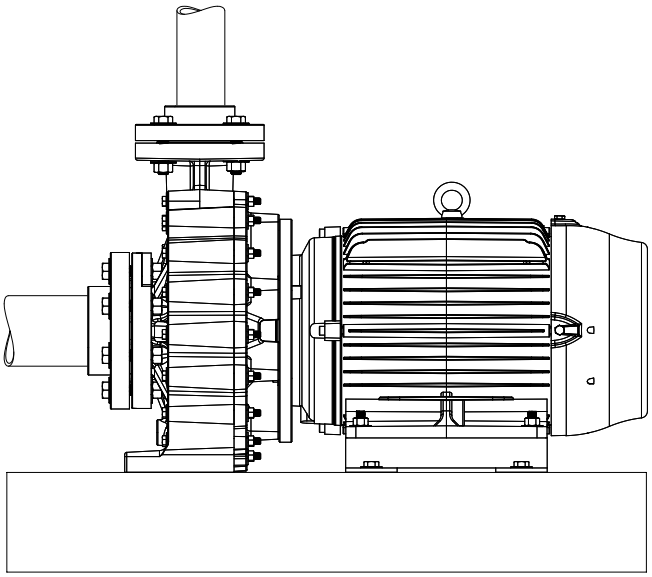

1. Disconnect electrical power from the motor using a lockout/tagout procedure in compliance with OSHA 1910.147 (Control of Hazardous Energy).

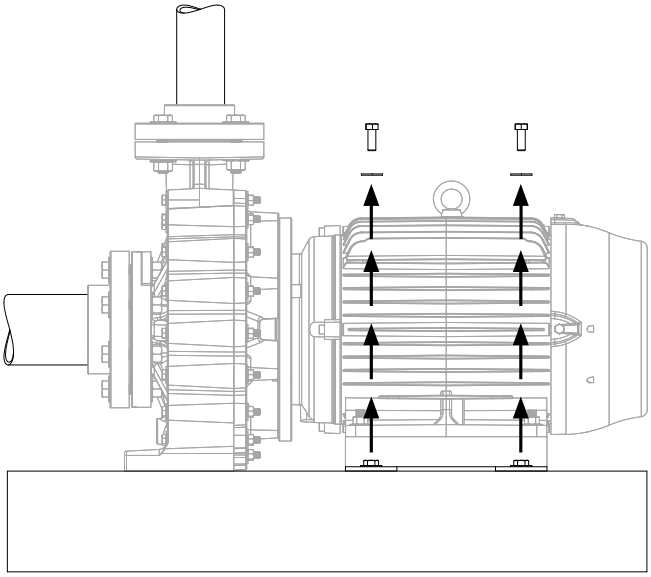

2. Remove the (4) motor mount anchor bolts and washers.

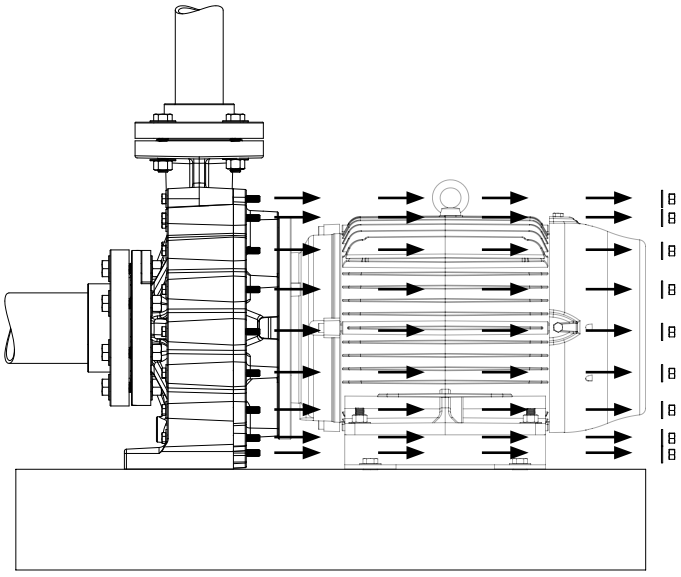

3. Remove the (16) rear-facing pump case nuts and washers.

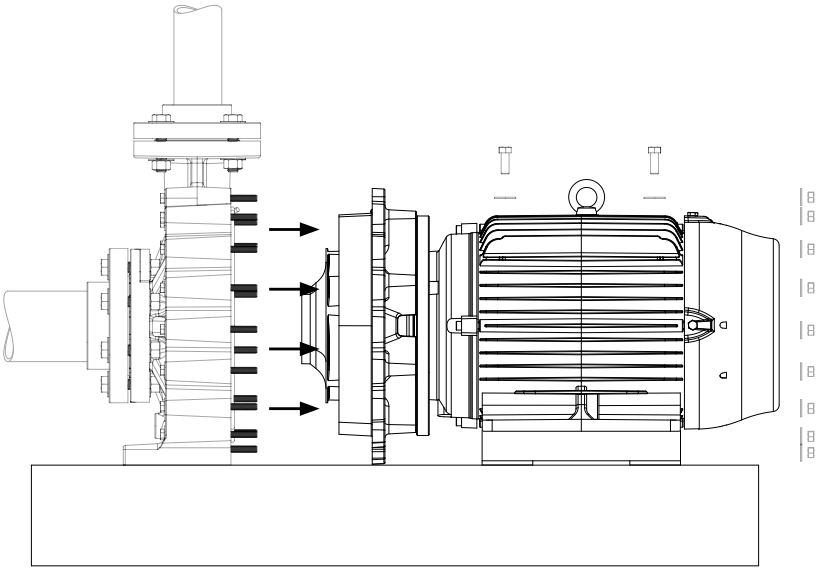

4. Pull motor backwards until impeller clears the stationary volute.

*Tip: Tilt motor on rear end to access pump internals for repairs and maintenance.

**WARNING: EYE PROTECTION IS STRONGLY RECOMMENDED**

## MAINTENANCE

**The pump must be drained before servicing or if stored below freezing temperatures. Periodic replacement of seals may be required due to normal carbon wear.*

**Lubrication:**
Rotary Seal – Requires no lubrication after assembly.

## TROUBLE SHOOTING AID

***Motor Will Not Rotate***
1. Check for proper electrical connections to motor.
2. Check main power box for tripped circuit breaker.

***Motor Hums Or Will Not Rotate***
1. Check for proper electrical connections to motor and proper wire size according to local electrical codes.
2. Check for foreign material inside pump.
3. Remove volute and check for impeller rotation without excessive resistance and/or noise.
4. Remove pump and check shaft rotation for excessive bearing noise.
5. Check start switch and/or capacitor.

***Pump Operates With Little Or No Flow***
1. Check to insure that pump is primed.
2. Check for leaking seal.
3. Improper line voltage to motor or incorrect rotation.
4. Check for clogged inlet port and/or impeller.
5. Defective check or foot valve.
6. Check inlet lines for leakage, either fluid or air.
7. Check for correct impeller rotation direction.

***Pump Loses Prime***
1. Defective check or foot valve.
2. Inlet line air leakage.
3. Seal leaking.
4. Fluid supply low.

***Motor Or Pump Overheats***
1. Check for proper line voltage and phase, also proper motor wiring.
2. Binding motor shaft or pump parts.
3. Inadequate ventilation.
4. Fluid being pumped should not exceed 194°F (90°C) for extended periods of time.

**MDM INCORPORATED**
**3345 N. Cascade Ave • Colorado Springs, CO • 80907**
**Phone (719) 634-8202 • Fax (866) 425-1346**
**www.mdminc.com • sales@mdminc.com**

Loctite® is a registered trademark of Henkel Corporation.
Molykote® 111 is a registered trademark of Dow Corning Corporation.
Impenatra® is a registered trademark of MDM Incorporated.
Genesys® is a registered trademark of MDM Incorporated.
Genesys 4x3-9 Installation Manual.Indd Updated Updated 11/24/26

1 Year Warranty