GENESYS® 3X2-6

INSTALLATION AND SERVICE MANUAL

FILL IN FOR FUTURE REFERENCE:

MODEL: _____

SERIAL NUMBER: _____

DATE PURCHASED: _____

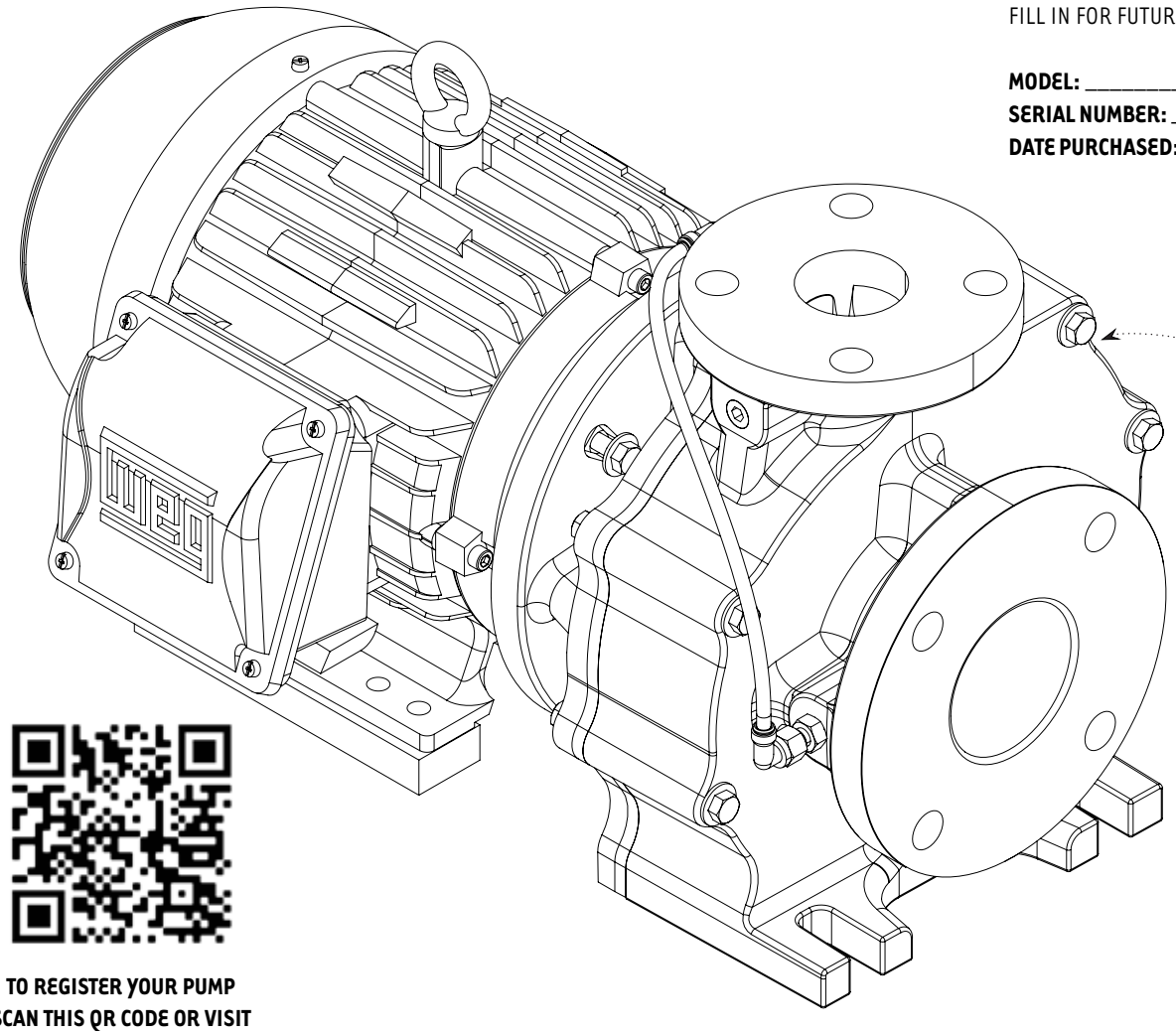

TO REGISTER YOUR PUMP SCAN THIS QR CODE OR VISIT MDMINC.COM/PUMP-REGISTRATION

**MOTORS ARE SUBJECT TO CHANGE DUE TO AVAILABILITY OR SPECIFICATION REQUIREMENTS.*

TYPE: END-SUCTION CENTRIFUGAL
MOTOR: NEMA 143JM-215JM
HORSEPOWER: UP TO 20 HP
INLET: 3" FLANGED
DISCHARGE: 2" FLANGED
MATERIAL: VINYL ESTER RESIN BRACKET AND VOLUTE
NORYL® IMPELLER. OPTIONAL PLENCO BRACKET & VOLUTE
*CANNOT USE PLENCO ON 2POLE (3450 RPM APPLICATIONS)
HARDWARE: STAINLESS STEEL

SEAL OPTIONS: IMPENATRA® II NON-METALIC MECHANICAL SEAL:
CARBON GRAPHITE/VITON®/SILICON CARBIDE
SILICON CARBIDE/VITON®/SILICON CARBIDE, ETC.
OTHER OPTIONS: EXTENSION COUPLED, PEDESTAL MOUNTED AND LONG-COUPLED
WITH PEDESTAL MOUNTED PUMP ON POLYMER BASEPLATE
PUMP ENDS INSERT AND SEAL FLUSH PLANS AVAILABLE
ACCESSORIES: 500 CUBIC INCH STRAINER BASKET
SWING CHECK VALVES (1.5", 2", 3")

Read completely before you install or operate your new pump. Do not allow the motor to become submerged. Never run dry. Never reverse rotation. Never exceed an internal case pressure of: 100 PSI.

© MDM INCORPORATED

GENESYS® 3X2-6

We congratulate you on your choice of the Genesys® 3X2-6 Centrifugal Pump. It has been carefully designed using the advantages of today's technology and carefully constructed to give you the dependability of yesterday. To insure proper performance, we urge you to carefully follow the instructions in this manual. If you have any questions, please call your supplier for assistance or visit www.mdminc.com/support.

INSTALLATION

PLEASE READ CAREFULLY. WHEN PROPERLY INSTALLED, THE GENESYS® PUMP WILL PROVIDE DEPENDABLE TROUBLE-FREE SERVICE.

1. Locate the pump as near the fluid source as possible. A flooded suction situation is preferred.
2. Mount motor base to a secure, immobile foundation.
3. The pipe fittings should be self-supported and in neutral alignment with each port. (i.e. Fittings must not be forced into alignment which may cause premature line failure or damage to the pump volute).
4. Never restrict the intake. Keep both input and discharge lines as free of elbows and valves as possible. Always use pipe of adequate diameter. This will reduce friction losses and maximize output.

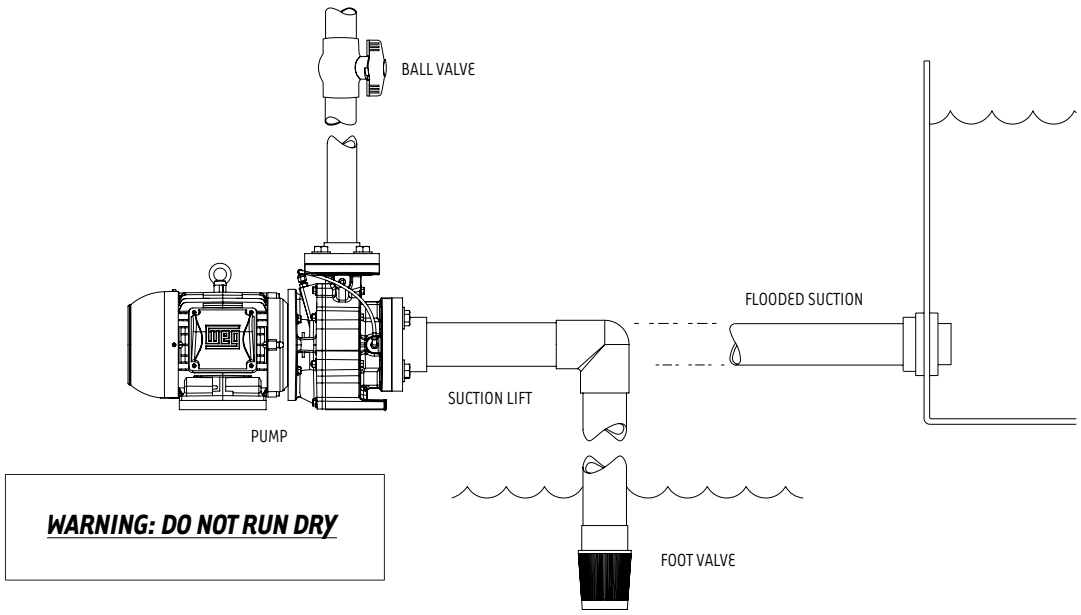

WARNING: ALWAYS SHUT OFF ELECTRICAL POWER BEFORE INSTALLATION AND / OR SERVICING THIS PUMP.
ALL ELECTRICAL WIRING SHOULD MEET STATE AND LOCAL ORDINANCES. IMPROPER WIRING MAY NOT ONLY BE A SAFETY HAZARD BUT MAY PERMANENTLY DAMAGE THE MOTOR AND/OR PUMP. 50HZ MOTORS ARE AVAILABLE. CONTACT YOUR SUPPLIER FOR INFORMATION.

ELECTRICAL HOOK-UP

1. Check that supply voltages match the motor's requirements.
2. Check motor wiring and connect, according to instructions on motor, to match supply voltage.
3. Verify motor rotation with rotation meter. Incorrect rotation can cause serious damage to pump and/or motor.
   Warning: MDM Incorporated does not recommend checking rotation by quickly switching power on and off because serious damage can occur.
4. Power cord should be protected by conduit or by cable and be of proper gauge. It should be no longer than necessary.
5. Power should be drawn directly from a box with circuit breaker protection or with a fused disconnect switch.

PUMP END ASSEMBLY

1. Clean and inspect all pump parts (o-rings, seal head, seal seat, pump casings, motor etc.).
2. Check motor rotation prior to pump assembly then check motor bearings for noise.
3. Install threaded rod in end of the motor shaft, leaving .725" ± .005" extended beyond the end of the motor shaft. Use thread locker to secure in place, let cure overnight. Be sure Loctite® is cured before proceeding. **Warning:** The threaded rod cannot move out of spec. (.725" ± .005"). **Note:** 0.725" height requirement for the threaded rod is for Standard Impellers only. The height for High Flow Impellers is 0.675".
4. Place 3/16" square key in motor shaft keyway. If a motor shaft sleeve is installed, the end of the square key will slide underneath. Install motor shaft heat shrink tubing sleeve at this time.
5. Place slinger over motor shaft then slide slinger all of the way onto motor face, bottomed out.
6. **Step A:** Using a silicon based grease such as Molykote® 111 Compound or a dielectric grease, lightly grease the OD of the seal head casing/o-ring and the pump bracket seal bore. **Step B:** Press the seal head assembly into the pump bracket seal bore to stop by applying pressure only on the seal casing shoulder by using 1 3/4" or 45mm socket (do not press on the seal head carbon). **Step C:** Wipe away any grease squeeze out.
7. **Step A:** Lightly grease the seal seat (mating ring) o-ring and impeller hub ID. **Step B:** Press the seal seat into the impeller hub to bottom, make sure seat face is facing up (exposed) and the seal seat (o-ring side is facing down towards impeller hub), making sure the o-ring has not dislodged and the seal seat sits flat in the bottom of the impeller hub. **Step C:** Wipe away any excess grease. **Step D:** Turn over impeller and then lightly chamfer the impeller cap recess.
8. **Step A:** Align the bracket over the motor mounting holes and C face. **Step B:** Using anti-seize on the bolt threads, install bracket/motor mounting bolts and washers. Coat bolt tips with anti-seize grease / lubricant to prevent corrosion buildup. **Step C:** Tighten to 75 in. lbs. Use 9/16" (15mm) or 3/4" (20mm). Use wrench to tighten bolts in a cross pattern.
9. Install 7/16-20 Male SAE fitting on both bracket and volute. A small amount of silicon based grease on the o-ring may aid in assembly. Tighten until the hex nut contacts the seal flush port flat. **Warning:** Do not over tighten.
10. **Step A:** Clean both seal faces with a lint free tissue and alcohol. **Warning:** Do not use grease on the seal faces. **Step B:** Lightly coat the motor shaft end, square key and impeller insert ID with anti-seize compound, avoiding excess squeeze out. **Step C:** With seal seat facing down slide impeller onto motor shaft aligning key and keyways until seal faces touch.
11. **Step A:** Slide the impeller further towards the motor, compressing the seal and hold in place. **Step B:** Coat rubber washer with Molykote® 111 Compound or dielectric grease. **Step C:** Place rubber impeller washer over the threaded rod until it bottoms in contact with the motor shaft. **Step D:** Impeller metal washer is next placed on top of the rubber impeller washer then lightly grease the side of the metal washer that will contact with the rubber washer. **Step E:** Lock the impeller in place with the 3/8"-16 hex jam nut, tighten to 40 in. lbs. **Warning:** Overtightening will cause damage to rubber impeller washer.
12. **Step A:** Lightly grease the impeller cap o-ring gland, place the o-ring in the gland and lightly grease the outside of the o-ring and the impeller nose opening. **Step B:** Assemble the impeller cap w/ o-ring onto the threaded rod. **Step C:** Tighten the impeller cap to 40 in. lbs.
13. Place large o-ring into the o-ring gland in the pump bracket and use grease only if required.
14. Assemble volute into position aligning over impeller.
15. Install tubing into push to connect elbows, then install smooth stem end into SAE fittings. Tighten compression nuts to secure around stem end of the elbow. **Warning:** Do not over tighten.
16. Secure volute to bracket using the supplied five 5/16"-18 x 4" through bolts with washers, lock washers and nuts and three 5/16"-18 x 1-1/4" long bolts with washers and lock washers into the molded inserts. **Step A:** Using anti-seize on the bolt threads, coat bolt tips with anti-seize grease/ lubricant to prevent corrosion buildup. **Step B:** Tighten all bolts to 75 in. lbs. Use 1/2'' (13mm) wrenches to tighten bolts and nuts in a cross pattern.
17. **Step A:** Apply thread sealant or Teflon® tape to the drain plug threads. **Step B:** Tighten to seal.
18. Discharge hardware is supplied as it uses non-standard (and possibly hard to find) nuts. Coat the bolt tips with anti-seize grease / lubricant to prevent corrosion buildup.

TEST PUMP

- Confirm all plumbing / piping to pump-flange connections are torqued down according to Figure 1.
- Recommended Bolt Torque is shown in Figure 1. Threads should be clean and well lubricated. Actual field conditions may require variations in these recommendations.
  Caution: Unnecessary over-torquing will damage the flange.
- Flood water, some tightening of the seal flush fittings may be necessary.
- If a VFD is utilized, make certain to use the jog function when testing rotation.

Figure 1

FLANGE SIZE (IN.)	RECOMMENDED TORQUE (FT. LBS.)
2-4	25
6	40

Torque Sequence

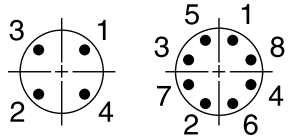

DISASSEMBLY

Disassembly is the reverse of assembly.

GENESYS® 3X2-6 PUMP SCHEMATIC

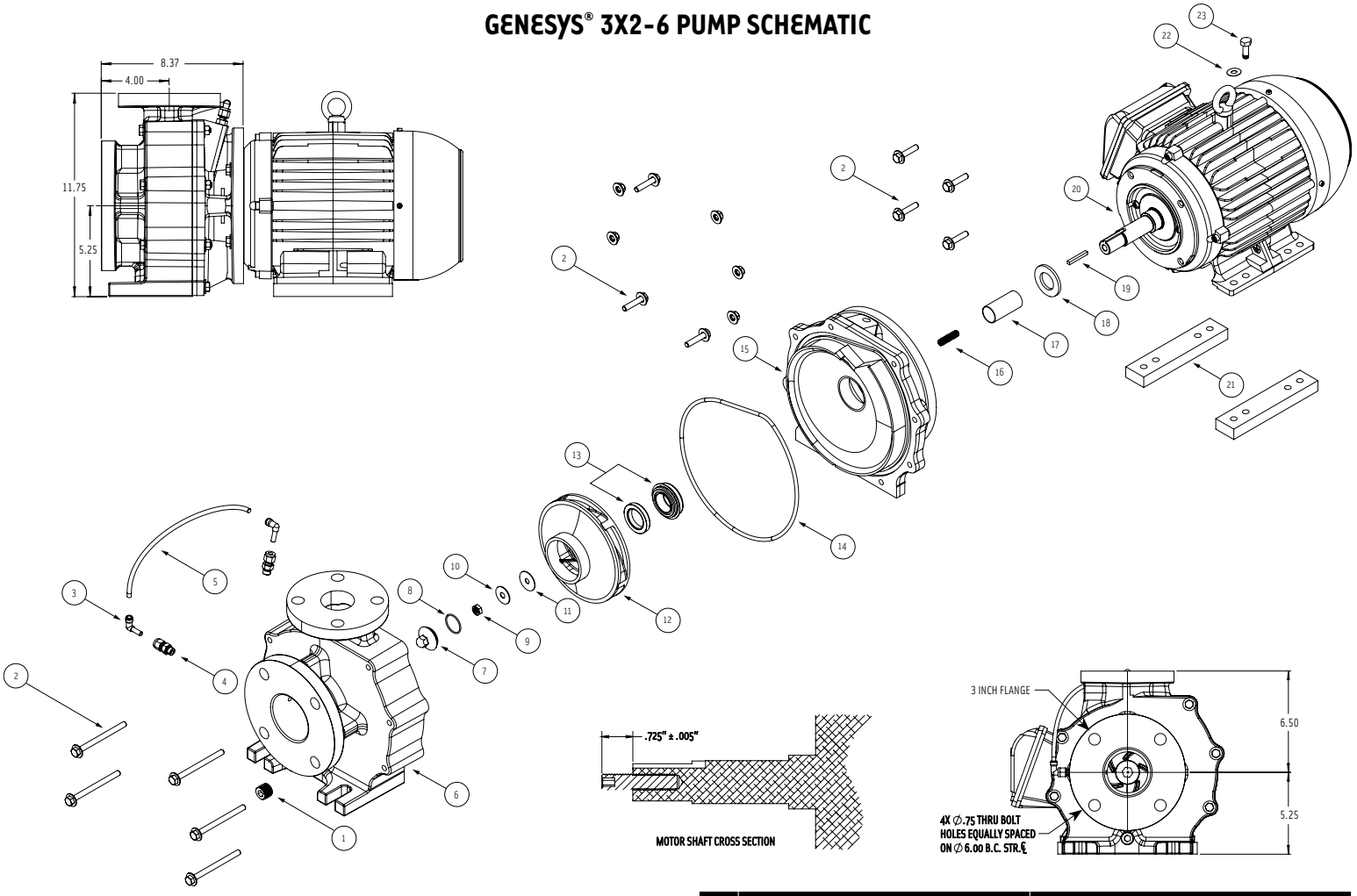

REFERENCE NUMBER	PART NAME	QTY.
1	DRAIN PLUG	1
2	HARDWARE KIT	1
3	1/4" FLUSH PORT - SMOOTH STEM X PUSH TO CONNECT ELBOW	2
4	1/4" FLUSH PORT - 7/16-20 MALE SAE FITTING	2
5	1/4" FLUSH PORT - TUBE	1
6	VOLUTE	1
7	CAP	1
8	O-RING, CAP	1
9	IMPELLER NUT	1
10	IMPELLER WASHER	1
11	IMPELLER WASHER GASKET	1
12	IMPELLER	1
13	SEAL KIT	1
14	O-RING, VOLUTE	1
15	BRACKET	1
16	THREADED ROD, 3/8" – 16 x 1.5" LONG,SS	1
17	SHAFT SLEEVE	1
18	SLINGER	1
19	KEY, SQUARE, .188" x 1.5" LONG, SS	1
20	MOTOR	1
21	RISER BLOCKS	2
22	BASE WASHERS	4
23	BASE SCREWS	4

QTY.	TOOLS / MATERIALS	USAGE
1	ROLL OF PAPER TOWELS	WIPE OFF EXCESS GREASE / HANDS
1	TUBE OF MOLYKOTE® 111 / DIELECTRIC GREASE	LUBRICATE / SEALS PARTS
1	BOTTLE/ STICK LOCTITE	HELPS BOLTS REMAIN TIGHT
1	HEAT GUN	SHRINK TUBING SLEEVE
1	BOX OF LINT FREE TISSUE	WIPE OFF SEAL FACES
1	BOTTLE OF RUBBING ALCOHOL	CLEAN SEAL FACES / SURFACES
1	TUBE OF ANTI-SEIZE GREASE / LUBRICANT	1. APPLY TO SHAFT END 2. APPLY TO ALL BOLT THREADS
1	BOX KNIFE	CUT HEAT SHRINKING TUBE
1	ARBOR PRESS	1. PRESS SEAL HEAD INTO BRACKET 2. PRESS SEAT INTO IMPELLER
1	**HAMMER / MALLET	**IF ARBOR PRESS IS NOT AVAILABLE
1	CALIPERS	1. MEASURE THREADED ROD 2. MEASURE HEAT SHRINK TUBING SLEEVE
1	PLIERS / CHANNEL LOCKS	HOLD SHAFT STILL
1	CHAMFERING TOOL	1. CHAMFER IMPELLER BORE EDGE 2. CHAMFER BRACKET BORE EDGE
1	1 3/4" SOCKET	PRESS SEAL HEAD INTO BRACKET
1	3/16" ALLEN WRENCH	INSTALL THREADED ROD INTO MOTOR SHAFT
1	?" ALLEN WRENCH	INSTALL DRAIN PLUG
1	9/16" OR 3/4" WRENCH	INSTALL BRACKET BOLTS (*BASED ON MOTOR SIZE)
1	TORQUE WRENCH	TO INSTALL IMPELLER NUT (CANNOT EXCEED 40 IN. LBS.)
1	9/16" DEEP SOCKET	TIGHTEN IMPELLER NUT @ 40 IN. LBS.
1	5/8" DEEP SOCKET	TIGHTEN IMPELLER CAP
2	1/2" WRENCH	TIGHTEN VOLUTE BOLTS
2	15/16" WRENCH	TIGHTEN FLANGE NUTS / BOLTS

© MDM INCORPORATED

GENESYS® 3X2-6 ANCHOR INSTALLATION

IMPORTANT: Make certain all inlet and discharge piping are independently supported to a post base, strut, and pipe clamp system.

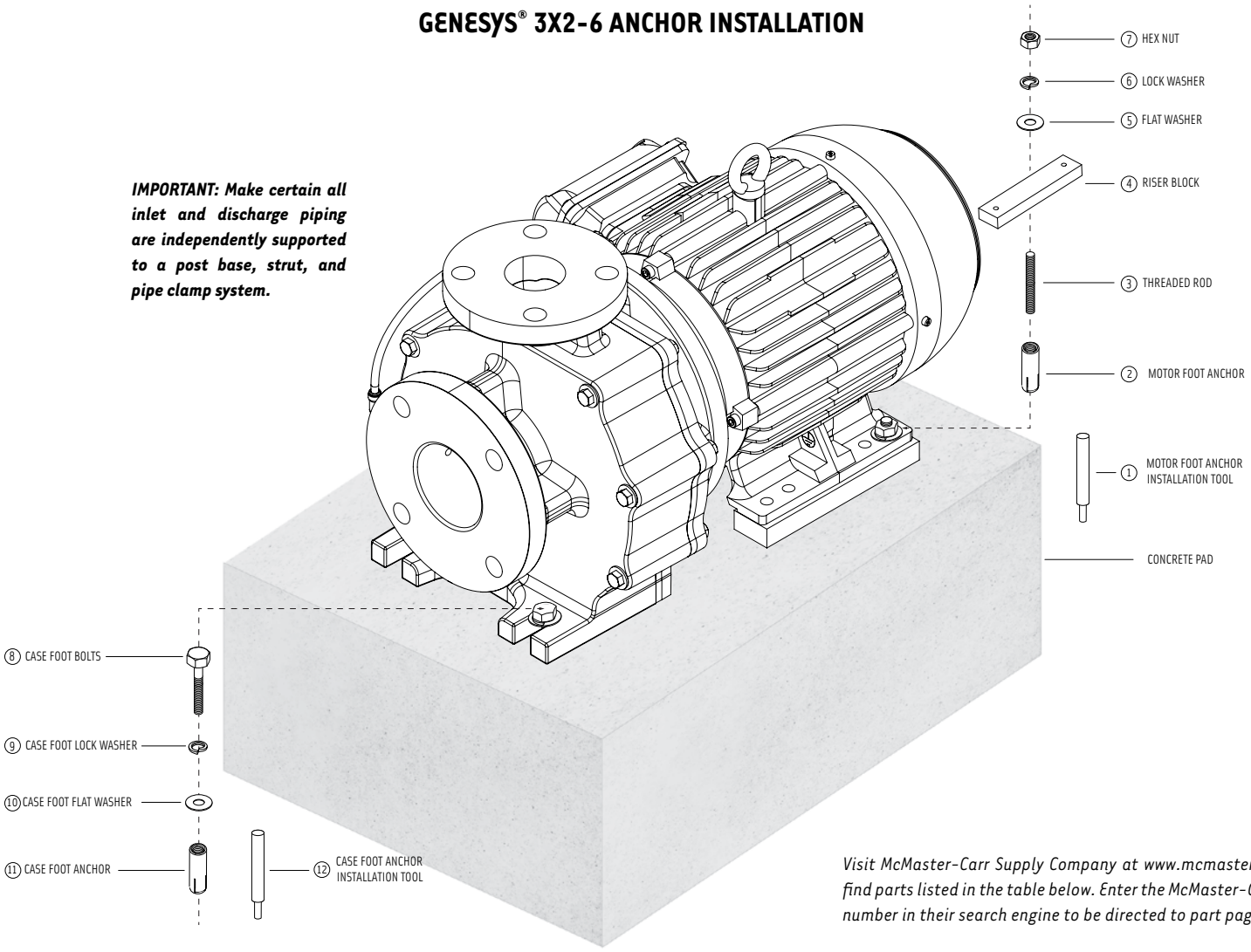

Visit McMaster-Carr Supply Company at www.mcmaster.com to find parts listed in the table below. Enter the McMaster-Carr part number in their search engine to be directed to part page.

Consult Motor Name Plate for Frame Size Specification

NO.	DESCRIPTION	QTY.	NEMA 143/5JM	NEMA 182/4JM	NEMA 213/5JM
1	MOTOR FOOT ANCHOR INSTALLATION TOOL	1	97077A110	97077A120	97077A120
2	MOTOR FOOT ANCHOR	4	97095A111	97095A121	97095A121
3	THREADED ROD	4	90575A570	90575A292	90575A292
4	MOUNTING BLOCK	2	G211 (MDM P/N)	G211 (MDM P/N)	G211 (MDM P/N)
5	FLAT WASHER	4	90107A029	90107A127	90107A127
6	LOCK WASHER	4	92147A029	92147A031	92147A031
7	HEX NUT	4	94819A043	94819A049	94819A049
8	CASE FOOT HEX BOLT	2	93190A718	93190A718	93190A718
9	CASE FOOT LOCK WASHER	2	92147A033	92147A033	92147A033
10	CASE FOOT FLAT WASHER	2	90107A033	90107A033	90107A033
11	CASE FOOT CONCRETE ANCHORS	2	97095A131	97095A131	97095A131
12	CASE FOOT ANCHOR INSTALLATION TOOL	1	97077A130	97077A130	97077A130

McMaster-Carr Part Numbers

© MDM INCORPORATED

B73LEAN BACK END PULLOUT

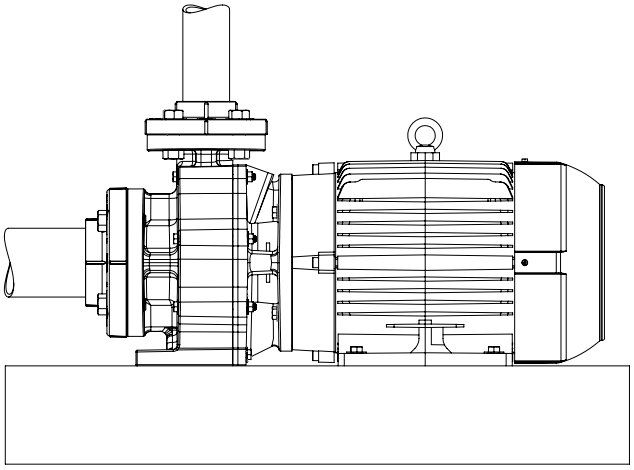

1. Disconnect electrical power from the motor using a lockout/tagout procedure in compliance with OSHA 1910.147 (Control of Hazardous Energy).

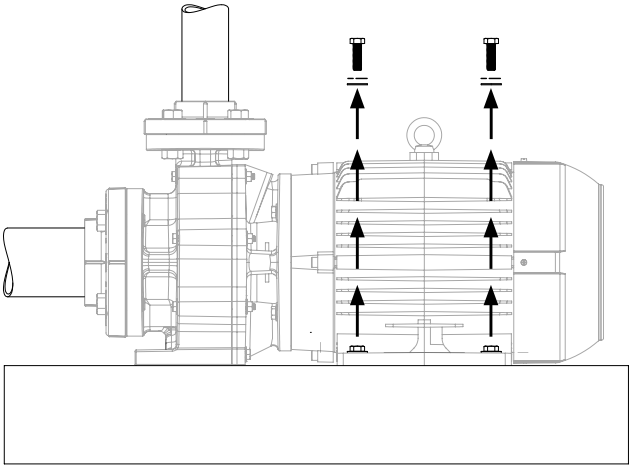

2. Remove the (4) motor mount anchor bolts and washers.

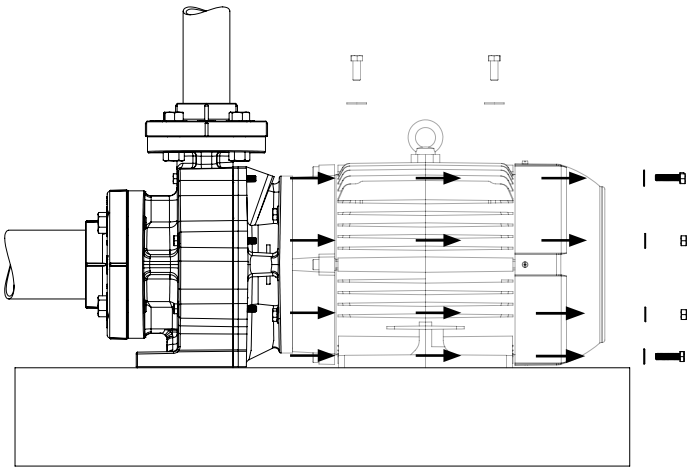

3. Remove the (8) rear-facing pump case nuts and washers.

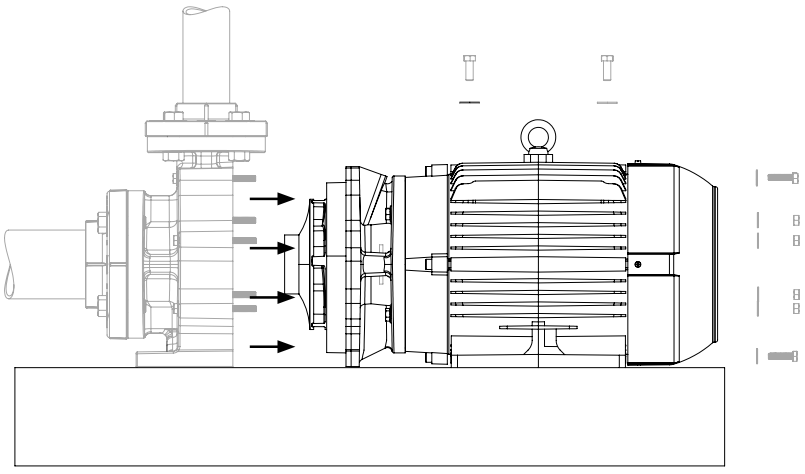

4. Pull motor backwards until impeller clears the stationary volute.

*Tip: Tilt motor on rear end to access pump internals for repairs and maintenance.

WARNING: EYE PROTECTION IS STRONGLY RECOMMENDED

MAINTENANCE

**The pump must be drained before servicing or if stored below freezing temperatures. Periodic replacement of seals may be required due to normal carbon wear.*

Lubrication:
Rotary Seal – Requires no lubrication after assembly.

TROUBLE SHOOTING AID

Motor Will Not Rotate
1. Check for proper electrical connections to motor.
2. Check main power box for tripped circuit breaker.

Motor Hums Or Will Not Rotate
1. Check for proper electrical connections to motor and proper wire size according to local electrical codes.
2. Check for foreign material inside pump.
3. Remove volute and check for impeller rotation without excessive resistance and/or noise.
4. Remove pump and check shaft rotation for excessive bearing noise.
5. Check start switch and/or capacitor.

Pump Operates With Little Or No Flow
1. Check to insure that pump is primed.
2. Check for leaking seal.
3. Improper line voltage to motor or incorrect rotation.
4. Check for clogged inlet port and/or impeller.
5. Defective check or foot valve.
6. Check inlet lines for leakage, either fluid or air.

Pump Loses Prime
1. Defective check or foot valve.
2. Inlet line air leakage.
3. Seal leaking.
4. Fluid supply low.

Motor Or Pump Overheats
1. Check for proper line voltage and phase, also proper motor wiring.
2. Binding motor shaft or pump parts.
3. Inadequate ventilation.
4. Fluid being pumped should not exceed 194°F (90°C) for extended periods of time.

Loctite® is a registered trademark of Henkel Corporation.
Molykote® 111 is a registered trademark of Dow Corning Corporation.
Teflon™ is a registered trademark of the Chemours Corporation.
Noryl™ is a registered trademark of SABIC.
Viton™ is a registered trademark of the Chemours Corporation.
Impenatra® is a registered trademark of MDM Incorporated.
Genesys® is a registered trademark of MDM Incorporated.
Genesys 3x2-6 Installation Manual.indd. Adobe Indesign CC. Updated 11/24/26

MDM INCORPORATED
3345 N. Cascade Ave • Colorado Springs, CO • 80907
Phone (719) 634-8202 • Fax (866) 425-1346
www.mdminc.com • sales@mdminc.com

1 Year Warranty