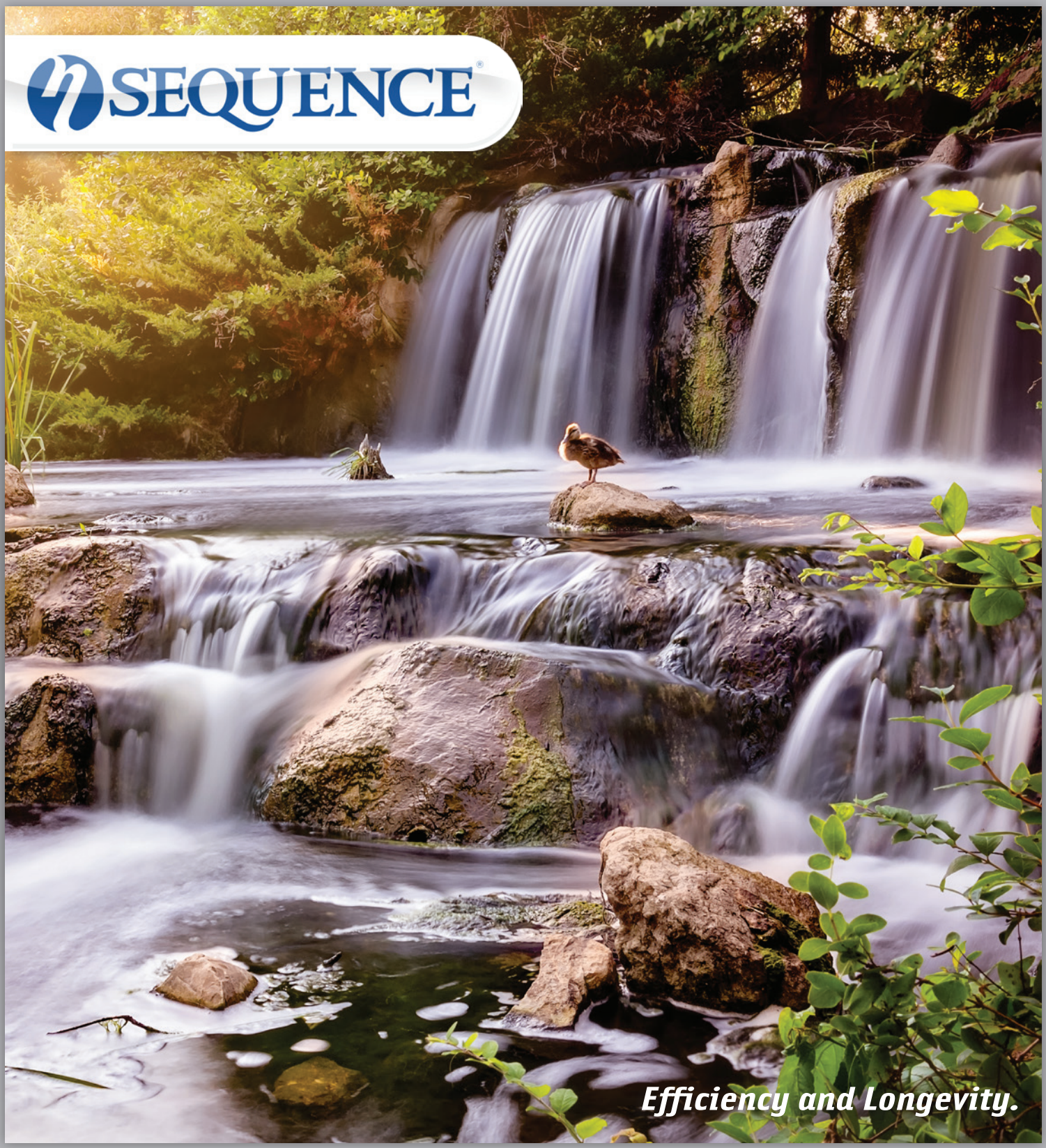

PRODUCT INFORMATION, PERFORMANCE CURVES AND SPECIFICATIONS

Sequence® 750 Series

Our best seller. The compact model 750 series delivers big flow for little power that's great for smaller and simpler ponds (3,000 gallons or less). The motor is totally enclosed fan cooled for durability and 115V only. It is supplied with an 8 foot cord set and a five year limited warranty.

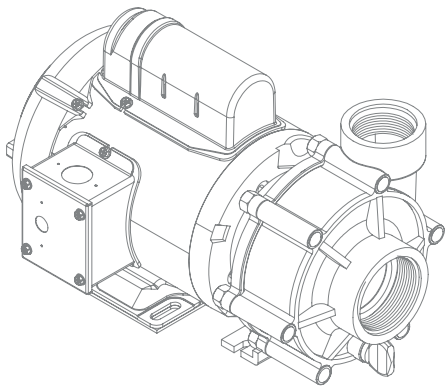

*Dimensions and illustrations are approximate and for reference only

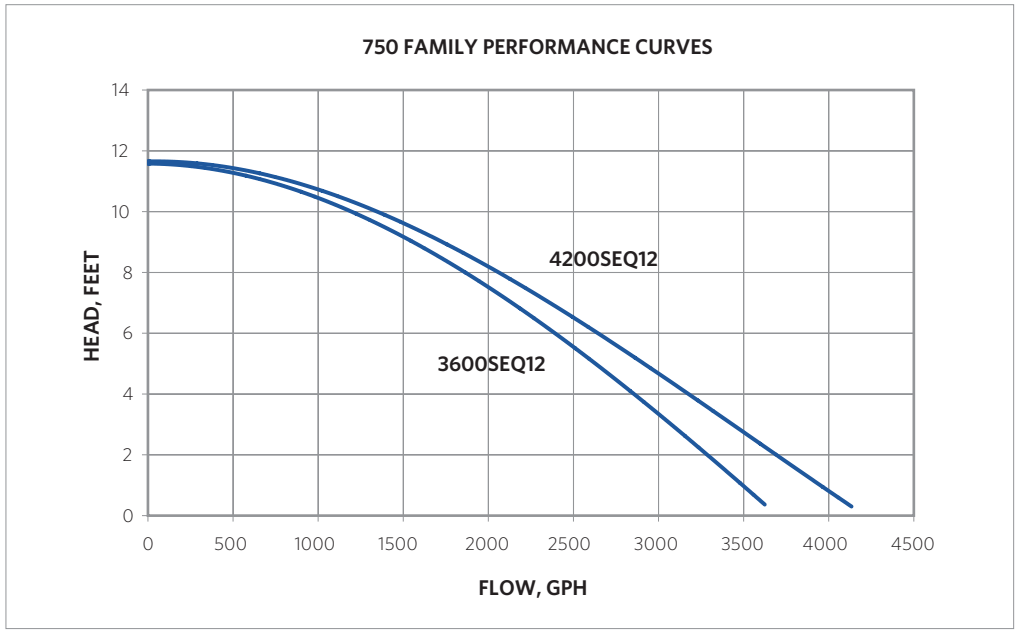

5 YEAR LIMITED WARRANTY

8 FOOT CORD SET

TEFC FAN COOLED MOTOR

MODEL	INLET	DISCHARGE	MAX FLOW (GPH)	MAX HEAD (FEET)	MAX POWER (WATTS)	MAX CURRENT (AMPS)	@ (VOLTS)	MOTOR HP	MOTOR ENCLOSURE	IMPELLER
3600SEQ12	2"	1.5"	3600	12'	142	1.25	115	⅛	TEFC	8
4200SEQ12	2"	1.5"	4200	12'	154	1.39	115	⅛	TEFC	9

Sequence® 1000 Series

The Classic. The model 1000 series has set the standard by which all others are measured. This series is a perfect blend of medium pressure and ample flow for the majority of ponds. The motor is totally enclosed, fan-cooled for durability and 115V or 230V. It is supplied with an 8 foot cord set and a five year limited warranty.

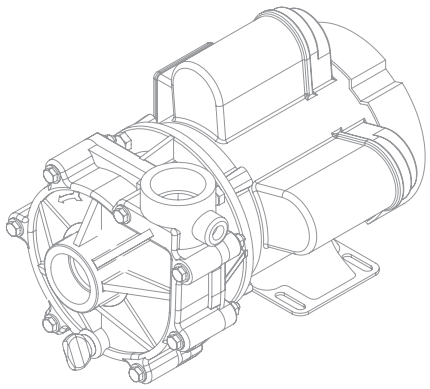

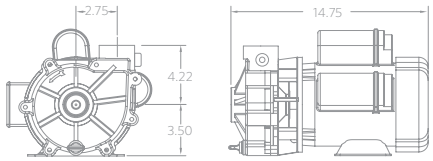

Dimensions and illustrations are approximate and for reference only

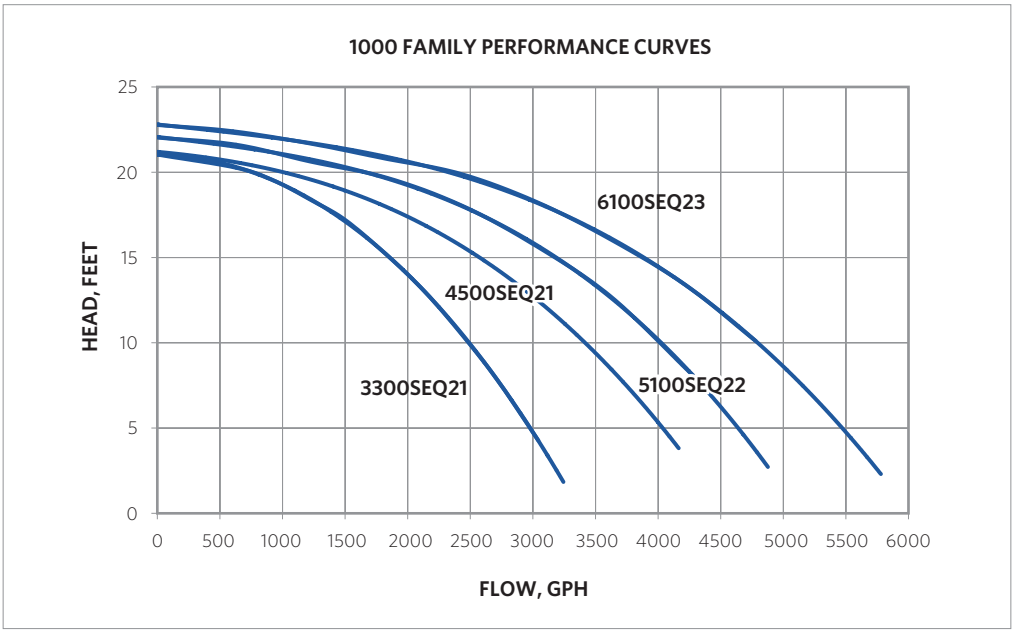

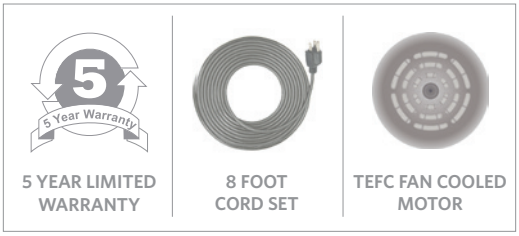

MODEL	INLET	DISCHARGE	MAX FLOW (GPH)	MAX HEAD (FEET)	MAX POWER (WATTS)	MAX CURRENT (AMPS)	@ (VOLTS)	MOTOR HP	MOTOR ENCLOSURE	IMPELLER
3300SEQ21	1.5"	1.5"	3300	21'	206	2.36	115/230	⅓,¼,⅙,⅛	TEFC	4
4500SEQ21	1.5"	1.5"	4500	21'	250	2.69	115/230	⅓,¼,⅙,⅛	TEFC	5
5100SEQ22	1.5"	1.5"	5100	22'	293	3.03	115/230	⅓,¼,⅙,⅛	TEFC	6
6100SEQ23	1.5"	1.5"	6100	23'	366	3.03	115/230	⅓,¼,⅙,⅛	TEFC	7

800.447.8342
sequencepumps.com

Sequence® is a registered trademark of MDM Incorporated

MADE IN U.S.A.

Sequence® 4000 Series

Introducing the new Sequence® 4000. The expansive design meets today's increased market demand for performance on all levels. Each Sequence® 4000 model comes complete with 2" FNPT and buttress thread ports and unions for ease of use. It is also supplied with an 8 foot cord set and a five year limited warranty.

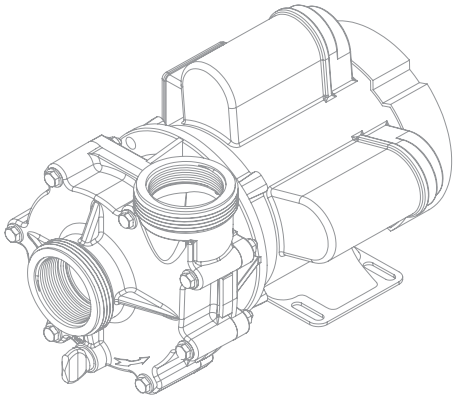

Dimensions and illustrations are approximate and for reference only

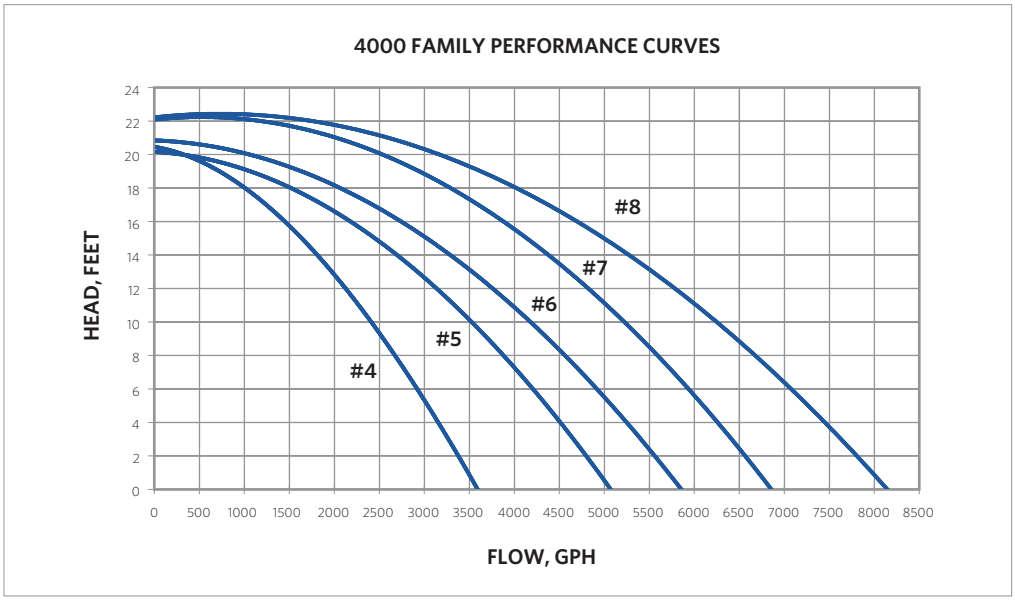

5 YEAR LIMITED WARRANTY

8 FOOT CORD SET

TEFC FAN COOLED MOTOR

MODEL	INLET	DISCHARGE	MAX FLOW (GPH)	MAX HEAD (FEET)	MAX POWER (WATTS)	MAX CURRENT (AMPS)	@ (VOLTS)	MOTOR HP	MOTOR ENCLOSURE	IMPELLER
3600SEQ20	2"	2"	3600	20.5'	227	1.9	115	⅓	TEFC	4
5000SEQ20	2"	2"	5000	20.2'	263	2.3	115	⅓	TEFC	5
5800SEQ21	2"	2"	5800	21'	296	2.6	115	⅓	TEFC	6
6800SEQ22	2"	2"	6840	22.2'	376	3.4	115	½	TEFC	7
8200SEQ22	2"	2"	8220	22.3'	450	4.0	115	½	TEFC	8

Sequence® is a registered trademark of MDM Incorporated

ASSEMBLED IN U.S.A

Sequence® Power 1000 Series

Massive flow. For the application that demands high performance, we offer the Sequence® Power Series with abundant flow and pressure. It is supplied with an 8 foot, 230 volt cord set and a five year limited warranty.

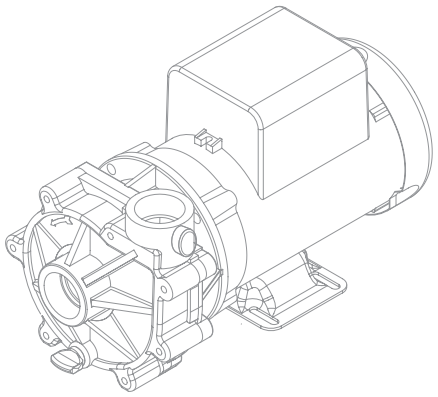

Dimensions and illustrations are approximate and for reference only

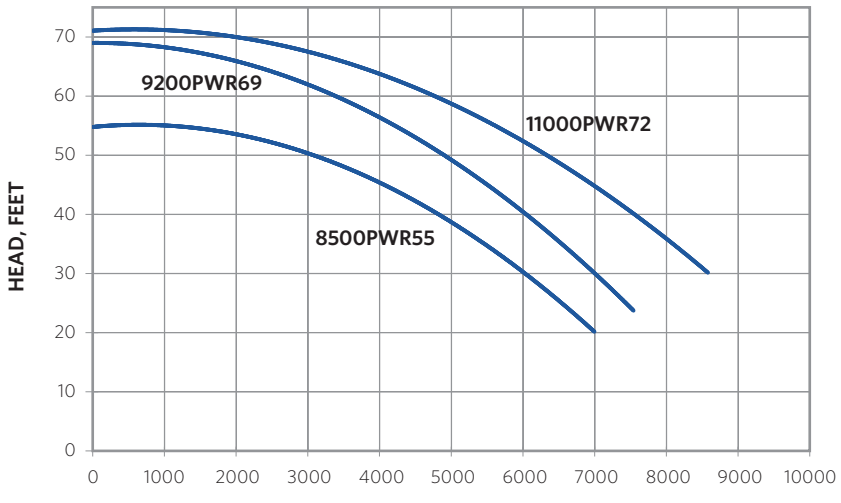

5 YEAR LIMITED WARRANTY

8 FOOT CORD SET

TEFC FAN COOLED MOTOR

MODEL	INLET	DISCHARGE	MAX FLOW (GPH)	MAX HEAD (FEET)	MAX POWER (WATTS)	MAX CURRENT (AMPS)	@ (VOLTS)	MOTOR HP	MOTOR ENCLOSURE	IMPELLER
8500PWR55	1.5"	1.5"	8500	55'	1385	5.38	230	1.5	TEFC	6T-3.85"
9200PWR69	1.5"	1.5"	9200	69'	1744	6.82	230	2	TEFC	6T- 4.25"
11000PWR72	1.5"	1.5"	11000	72"	2056	8.58	230	2	TEFC	7T- 4.21"

Sequence® Power 4000 Series

Our Power 4000 is built to support recirculation applications requiring flow rates above 8000 GPH at high head pressures. Achieving over 13,000 GPH and a max of 80 feet of head, the 4000 broadens the performance range in the Sequence® Power series. It is supplied with an 8-foot, 230V cord set and a five year limited warranty.

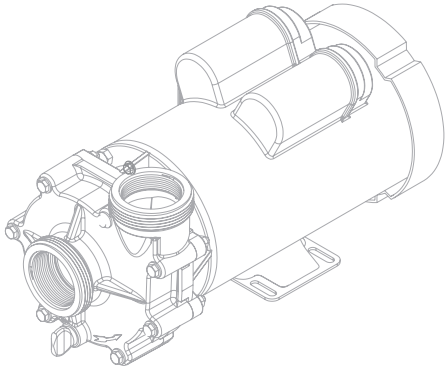

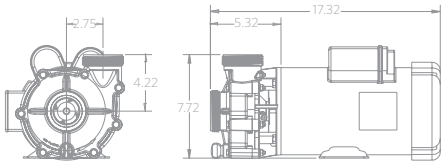

Dimensions and illustrations are approximate and for reference only

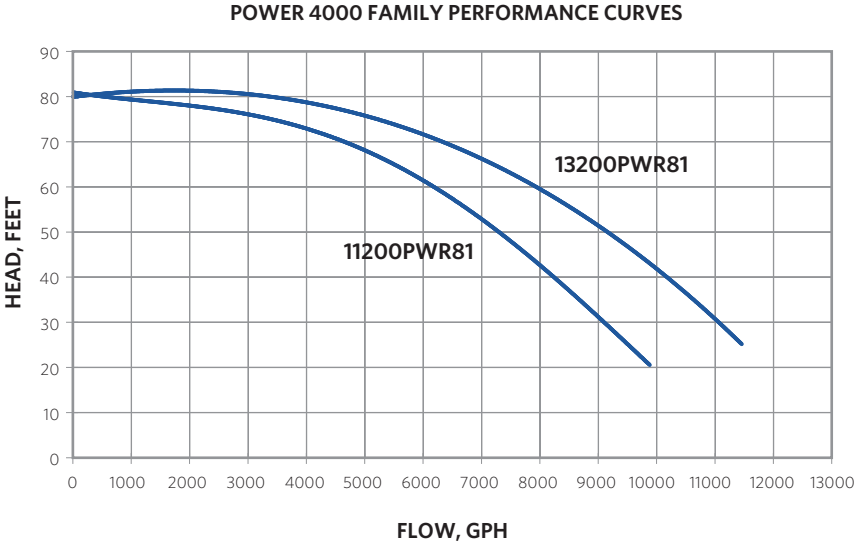

5 YEAR LIMITED WARRANTY

8 FOOT CORD SET

TEFC FAN COOLED MOTOR

MODEL	INLET	DISCHARGE	MAX FLOW (GPH)	MAX HEAD (FEET)	MAX POWER (WATTS)	MAX CURRENT (AMPS)	@ (VOLTS)	MOTOR HP (@ 3450)	MOTOR ENCLOSURE	IMPELLER
11200PWR81	2"	2"	11160	80.8'	2162	9.6	230	3	TEFC	6
13200PWR81	2"	2"	13200	81.7'	2595	11.5	230	3	TEFC	7

Sequence® Titan Series

As large water features and high turnover requirements continue to gain popularity, the cost of energy does not. The Sequence® Titan series is sure to cover most large scale water feature requirements. This pump comes with a five year limited warranty.

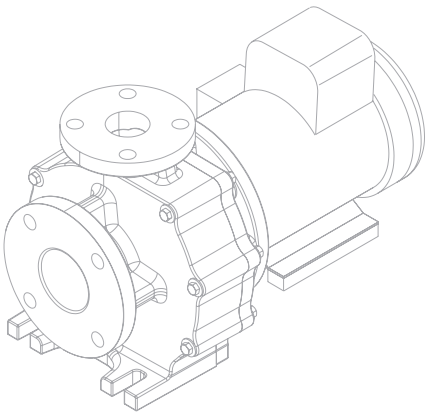

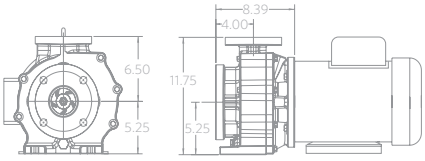

Dimensions and illustrations are approximate and for reference only

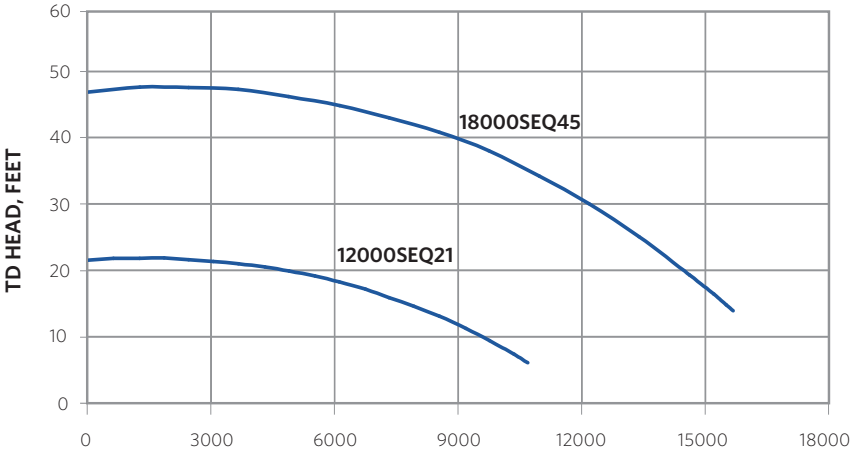

5 YEAR LIMITED WARRANTY

MANUFACTURED IN THE USA

TEFC FAN COOLED MOTOR

MODEL	INLET	DISCHARGE	MAX FLOW (GPH)	MAX HEAD (FEET)	MAX POWER (WATTS)	MAX CURRENT (AMPS)	@ (VOLTS)	MOTOR HP	MOTOR ENCLOSURE	PHASE
12000SEQ21	3"	2"	12500	21'	845	6.0	230	3/4	TEFC	SINGLE
18000SEQ45	3"	2"	18400	45'	2110	10.8	230	3	TEFC	SINGLE

Sequence® is a registered trademark of MDM Incorporated

MADE IN U.S.A.

Sequence® Alpha Primer

The Alpha Primer series integrates a basket-type pre-filter and self-priming capabilities into one efficient package for trouble-free operation. The integrated strainer basket on all primer units helps protect the internal rotating parts of the pump from damage due to external debris being pulled into the pump. It is supplied with an 8 foot, 115V cord set and a five year limited warranty.

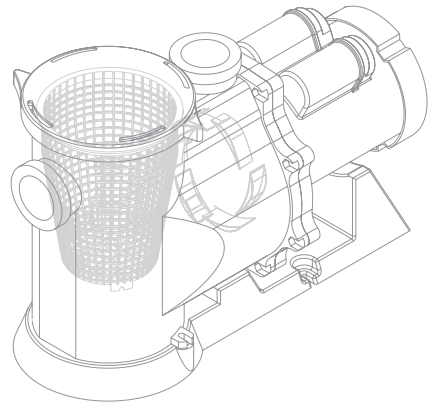

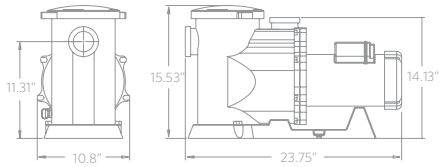

Dimensions and illustrations are approximate and for reference only

ALPHA PRIMER FAMILY PERFORMANCE CURVES

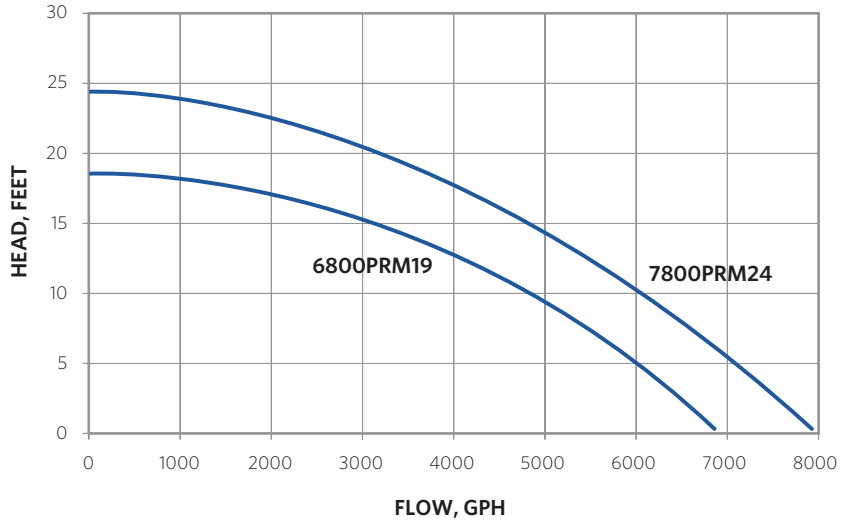

5 YEAR LIMITED WARRANTY

8 FOOT CORD SET

TEFC FAN COOLED MOTOR

MODEL	INLET	DISCHARGE	MAX FLOW (GPH)	MAX HEAD (FEET)	MAX POWER (WATTS)	MAX CURRENT (AMPS)	@ (VOLTS)	MOTOR HP	MOTOR ENCLOSURE
6800PRM19	2"	2"	6800	19'	369	3.93	115	½, ⅓	TEFC
7800PRM24	2"	2"	7800	24'	504	5.02	115	½, ⅓	TEFC

Sequence® is a registered trademark of MDM Incorporated

MADE IN U.S.A.

Sequence® Champion Primer

The Champion Primer series integrates a basket-type pre-filter and self-priming capabilities into one efficient package for trouble-free operation. The integrated strainer basket on all primer units helps protect the internal rotating parts of the pump from damage due to external debris being pulled into the pump. It is supplied with an 8 foot, 115V cord set and a five year limited warranty.

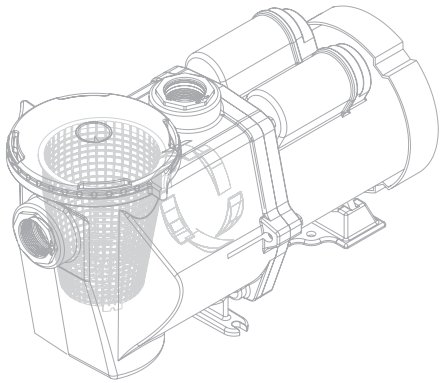

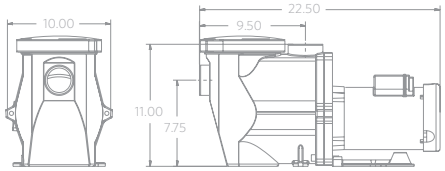

Dimensions and illustrations are approximate and for reference only

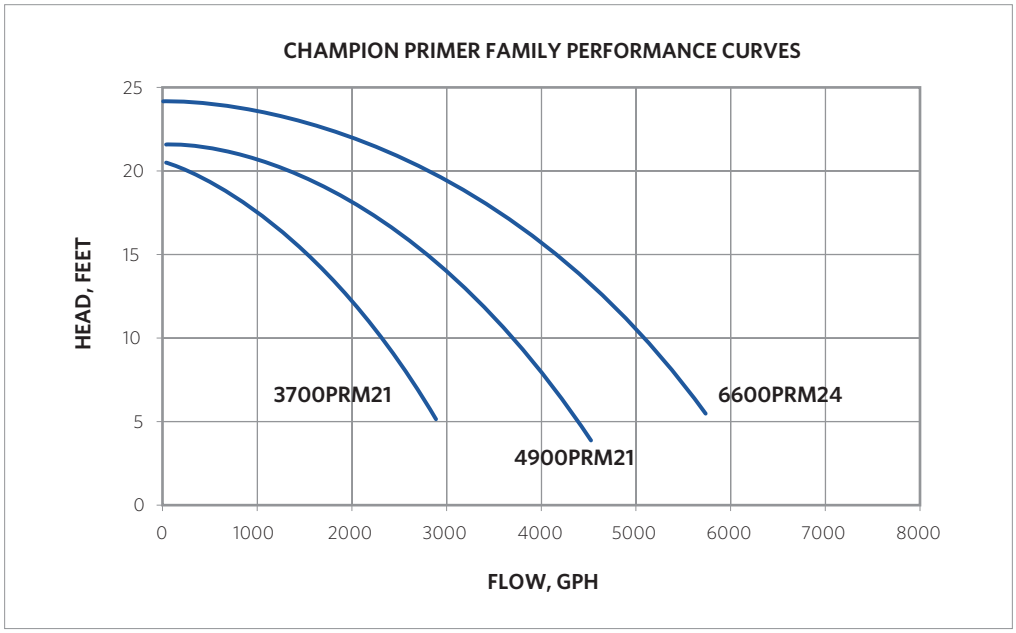

5 YEAR LIMITED WARRANTY

8 FOOT CORD SET

TEFC FAN COOLED MOTOR

MODEL	INLET	DISCHARGE	MAX FLOW (GPH)	MAX HEAD (FEET)	MAX POWER (WATTS)	MAX CURRENT (AMPS)	@ (VOLTS)	MOTOR HP	MOTOR ENCLOSURE
3700PRM21	2"	2"	3700	21'	228	2.76	115	½, ⅓	TEFC
4900PRM21	2"	2"	4900	21'	310	3.37	115	½, ⅓	TEFC
6600PRM24	2"	2"	6600	24'	457	4.61	115	½, ⅓	TEFC

Sequence® is a registered trademark of MDM Incorporated

MADE IN U.S.A.

Sequence® High-Speed Champion Primer

The Sequence® High-Speed Champion Primer series is made for those demanding applications where the constraint for high pressure is not subject to negotiation. The High-Speed Champion series integrates a basket-type pre-filter and self-priming capabilities into one efficient package for trouble-free operation. It is Supplied with an 8 foot, 230 volt cord set and a five year limited warranty.

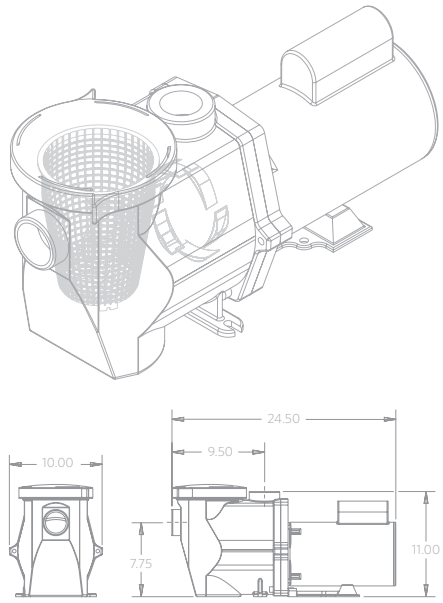

Dimensions and illustrations are approximate and for reference only

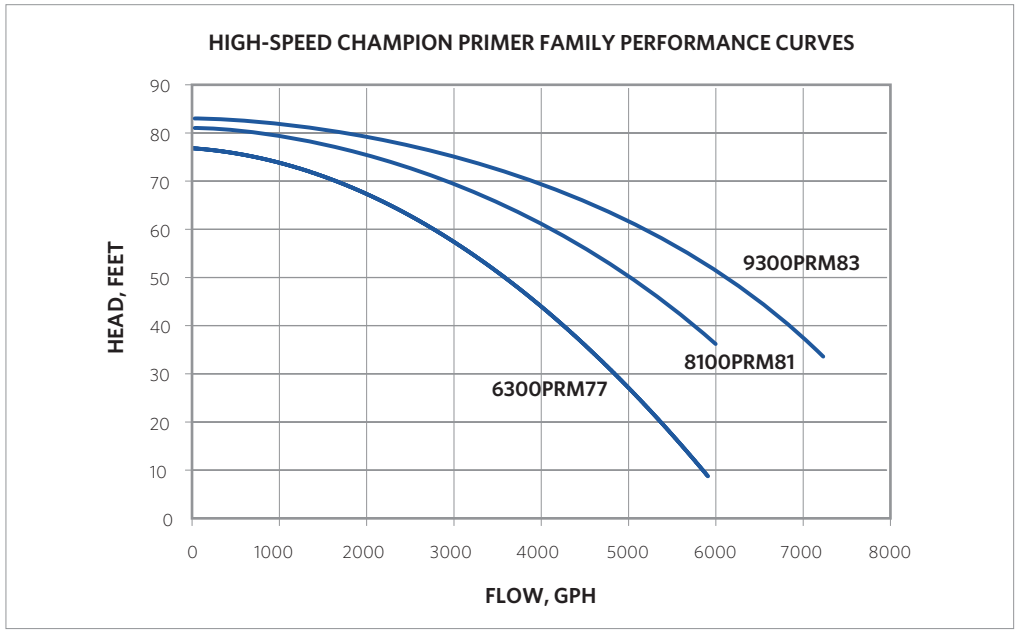

5 YEAR LIMITED WARRANTY

8 FOOT CORD SET

TEFC FAN COOLED MOTOR

MODEL	INLET	DISCHARGE	MAX FLOW (GPH)	MAX HEAD (FEET)	MAX POWER (WATTS)	MAX CURRENT (AMPS)	@ (VOLTS)	MOTOR HP	MOTOR ENCLOSURE
6300PRM77	2"	2"	6300	77'	1496	8.7	230	2	ODP
8100PRM81	2"	2"	8100	81'	1807	9.8	230	2	ODP
9300PRM83	2"	2"	9300	83'	2222	11.4	230	2	ODP

Sequence® is a registered trademark of MDM Incorporated

MADE IN U.S.A.

Basket Strainer (WW)

Our light duty WW model strainers are sold with either a 1.5" or 2" union adapter. All units come complete with an internal strainer assembly and gasket seals. Sequence® WW model strainers are designed, engineered, and produced in the USA.

SIZE	PART NUMBER	O-RINGS	MATERIAL
1.5" (90 CI)	1000.771-1	Buna	PVC/ABS/Lexon
2" (90 CI)	1000.771-7	Buna	PVC/ABS/Lexon

Basket Strainer (PF)

Our medium duty PF model strainers have a clear or gray PVC body and a basket made of stainless steel or acrylonitrile butadiene styrene (ABS). The standard port dimension is a 2" male thread that comes with adapters that have a slip port. With the PF model strainer you can expect higher quality molding processing, finer materials and excellent performance.

SIZE	COLOR	PART NUMBER	O-RINGS	MATERIAL
2" (500 CI)	Clear	24170488	Buna	PVC/ABS/SS
2" (500 CI)	Gray	24170496	Buna	PVC/ABS/SS

Basket Strainer (FT)

Our heavy duty FT model strainers are suitable for aquatics, general water and industrial applications. The standard strainers feature a unique seamless cast design that can be customized for Sequence® Titan pump applications requiring integral access ports and FTP stands. These basket strainers are available in corrosion-resistant plastics such as PVC, CPC, PP and PVDF, as well as fiberglass. All offer greater temperature resistance and chemical compatibility than traditional iron, steel and bronze strainers.

SIZE	PART NUMBER	CENTERLINE	MATERIAL
4x3"	24169627	5.25"	PV/CPC/PP/ PVDF/SS

Swing Check Valves

We offer three different sizes of swing check valves (1.5", 2" or 3") for applications with potential flow reversal. All units are made from 100% PVC with a rubber sealed flapper swing valve.

SIZE	PART NUMBER	MATERIAL
1.5"	MP-CV15	PVC
2"	MP-CV20	PVC
3"	MP-CV30	PVC

Sequence® is a registered trademark of MDM Incorporated

MADE IN U.S.A.

THE PEOPLE AT SEQUENCE® KNOW THAT YOUR PUMP IS AN INVESTMENT

Sequence® pumps are manufactured to quality standards that meet the most stringent of investment requirements. And just what is the most difficult investment standard to meet? The standard set by those who understand the true cost of ownership. True cost of ownership goes beyond the purchase price. When considering a pump for an aquatic system, longevity, efficiency, operating costs and ease of use must be considered when arriving at the actual cost of the investment.

In addition, the purchase of a Sequence® pump is an investment in the future. Since we choose to plow profits back into new product development, you can count on the fact that there will always be a new Sequence® pump in the future... and one that will be an even better investment.

Sequence® is the leader in high efficiency, external pumps for water features and koi ponds. From the compact model 750 and workhorse model 1000 to the self priming, integrated basket strainer and power series models, there is a pump for every application. All units are assembled and pre-tested in our Colorado manufacturing facility.

3345 N. Cascade Ave • Colorado Springs, CO 80907
800.447.8342 (Toll Free) • 719.634.8202 (Phone) • 866.425.1346 (Fax)
sales@mdminc.com • www.sequencepumps.com

MADE IN U.S.A.