SEQUENCE
7800PRM24
ALPHA PRIMER

SEQUENCE
7800PRM24

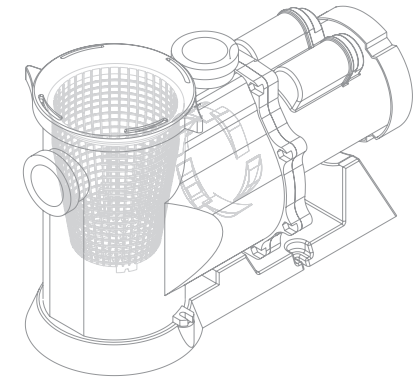

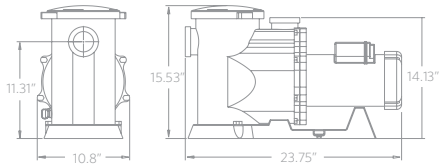

*Dimensions and illustrations are approximate and for reference only

Sequence® Alpha Primer Series - Model 6800PRM19

The Alpha Primer series integrates a basket-type pre-filter and self-priming capabilities into one efficient package for trouble-free operation. The integrated strainer basket on all primer units helps protect the internal rotating parts of the pump from damage due to external debris being pulled into the pump.

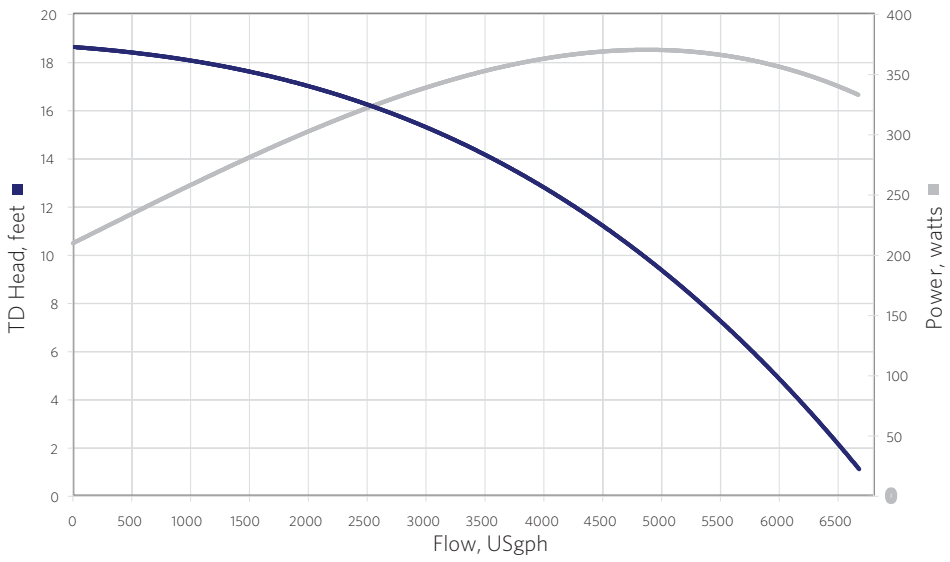

Flow At Total Dynamic Head	4'	8'	12'	16'	20'
GPM	103	89	70	45	0
GPH	6180	5340	4200	2700	0

5 YEAR LIMITED WARRANTY

8 FOOT CORD SET

TEFC FAN COOLED MOTOR

MODEL	6800PRM19
INLET	2"
DISCHARGE	2"
MAX FLOW (gph)	6800
MAX HEAD (feet)	19'
MAX POWER (watts)	369
MAX CURRENT (amps)	3.93
@ (volts)	115
MOTOR HP	½, ⅓
MOTOR TYPE	56YZ
MOTOR ENCLOSURE	TEFC

Sequence® is a registered trademark of MDM Incorporated

MADE IN U.S.A.

SEQUENCE® PUMPS

ALPHA PRIMER | Model 7800PRM24

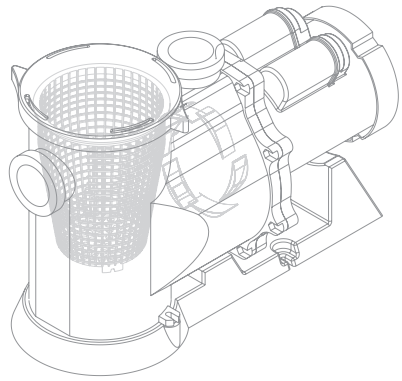

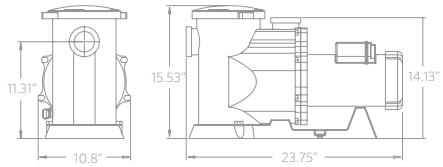

*Dimensions and illustrations are approximate and for reference only

Sequence® Alpha Primer Series - Model 7800PRM24

The Alpha Primer series integrates a basket-type pre-filter and self-priming capabilities into one efficient package for trouble-free operation. The integrated strainer basket on all primer units helps protect the internal rotating parts of the pump from damage due to external debris being pulled into the pump.

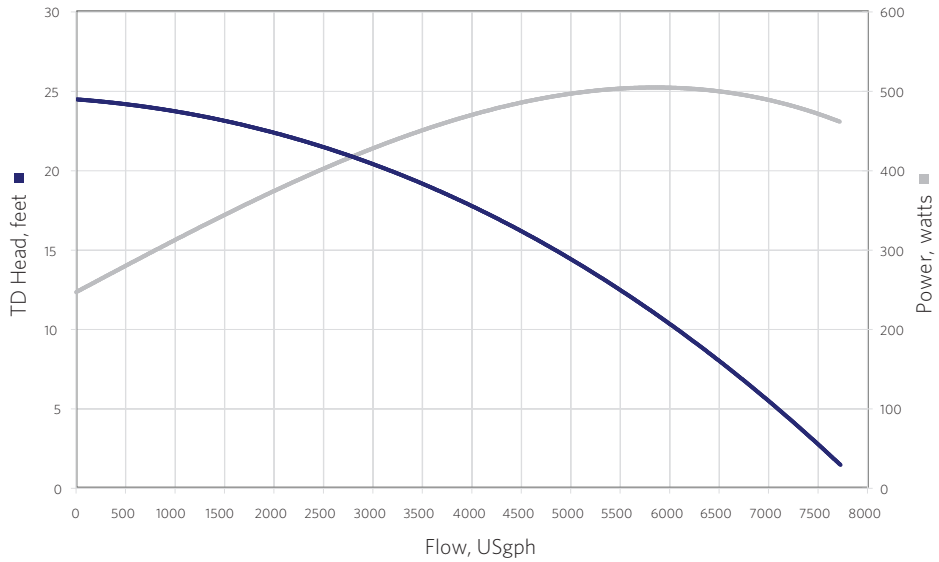

Flow At Total Dynamic Head	4'	8'	12'	16'	20'
GPM	121	108	94	75	54
GPH	7260	6480	5640	4500	3240

5 YEAR LIMITED WARRANTY

8 FOOT CORD SET

TEFC FAN COOLED MOTOR

MODEL	7800PRM24
INLET	2"
DISCHARGE	2"
MAX FLOW (gph)	7800
MAX HEAD (feet)	24'
MAX POWER (watts)	504
MAX CURRENT (amps)	5.02
@ (volts)	115
MOTOR HP	½, ⅓
MOTOR TYPE	56YZ
MOTOR ENCLOSURE	TEFC

Sequence® is a registered trademark of MDM Incorporated

MADE IN U.S.A.